NFPA®

13D

Standard for the Installation of Sprinkler Systems in One- and Two-Family Dwellings and Manufactured Homes

2022

NFPA®

IMPORTANT NOTICES AND DISCLAIMERS CONCERNING NFPA® STANDARDS

NFPA® codes, standards, recommended practices, and guides ("NFPA Standards"), of which the document contained herein is one, are developed through a consensus standards development process approved by the American National Standards Institute. This process brings together volunteers representing varied viewpoints and interests to achieve consensus on fire and other safety issues. While the NFPA administers the process and establishes rules to promote fairness in the development of consensus, it does not independently test, evaluate, or verify the accuracy of any information or the soundness of any judgments contained in NFPA Standards.

The NFPA disclaims liability for any personal injury, property, or other damages of any nature whatsoever, whether special, indirect, consequential or compensatory, directly or indirectly resulting from the publication, use of, or reliance on NFPA Standards. The NFPA also makes no guaranty or warranty as to the accuracy or completeness of any information published herein.

In issuing and making NFPA Standards available, the NFPA is not undertaking to render professional or other services for or on behalf of any person or entity. Nor is the NFPA undertaking to perform any duty owed by any person or entity to someone else. Anyone using this document should rely on his or her own independent judgment or, as appropriate, seek the advice of a competent professional in determining the exercise of reasonable care in any given circumstances.

The NFPA has no power, nor does it undertake, to police or enforce compliance with the contents of NFPA Standards. Nor does the NFPA list, certify, test, or inspect products, designs, or installations for compliance with this document. Any certification or other statement of compliance with the requirements of this document shall not be attributable to the NFPA and is solely the responsibility of the certifier or maker of the statement.

REMINDER: UPDATING OF NFPA STANDARDS

Users of NFPA codes, standards, recommended practices, and guides ("NFPA Standards") should be aware that these documents may be superseded at any time by the issuance of a new edition, may be amended with the issuance of Tentative Interim Amendments (TIAs), or be corrected by Errata. It is intended that through regular revisions and amendments, participants in the NFPA standards development process consider the then-current and available information on incidents, materials, technologies, innovations, and methods as these develop over time and that NFPA Standards reflect this consideration. Therefore, any previous edition of this document no longer represents the current NFPA Standard on the subject matter addressed. NFPA encourages the use of the most current edition of any NFPA Standard [as it may be amended by TIA(s) or Errata] to take advantage of current experience and understanding. An official NFPA Standard at any point in time consists of the current edition of the document, including any issued TIAs and Errata then in effect.

To determine whether an NFPA Standard has been amended through the issuance of TIAs or corrected by Errata, visit the "Codes & Standards" section at www.nfpa.org.

ADDITIONAL IMPORTANT NOTICES AND DISCLAIMERS CONCERNING NFPA® STANDARDS

Updating of NFPA Standards

Users of NFPA codes, standards, recommended practices, and guides ("NFPA Standards") should be aware that these documents may be superseded at any time by the issuance of a new edition, may be amended with the issuance of Tentative Interim Amendments (TIAs), or be corrected by Errata. It is intended that through regular revisions and amendments, participants in the NFPA standards development process consider the then-current and available information on incidents, materials, technologies, innovations, and methods as these develop over time and that NFPA Standards reflect this consideration. Therefore, any previous edition of this document no longer represents the current NFPA Standard on the subject matter addressed. NFPA encourages the use of the most current edition of any NFPA Standard [as it may be amended by TIA(s) or Errata] to take advantage of current experience and understanding. An official NFPA Standard at any point in time consists of the current edition of the document, including any issued TIAs and Errata then in effect.

To determine whether an NFPA Standard has been amended through the issuance of TIAs or corrected by Errata, visit the "Codes & Standards" section at www.nfpa.org.

Interpretations of NFPA Standards

A statement, written or oral, that is not processed in accordance with Section 6 of the Regulations Governing the Development of NFPA Standards shall not be considered the official position of NFPA or any of its Committees and shall not be considered to be, nor be relied upon as, a Formal Interpretation.

Patents

The NFPA does not take any position with respect to the validity of any patent rights referenced in, related to, or asserted in connection with an NFPA Standard. The users of NFPA Standards bear the sole responsibility for determining the validity of any such patent rights, as well as the risk of infringement of such rights, and the NFPA disclaims liability for the infringement of any patent resulting from the use of or reliance on NFPA Standards.

NFPA adheres to the policy of the American National Standards Institute (ANSI) regarding the inclusion of patents in American National Standards ("the ANSI Patent Policy"), and hereby gives the following notice pursuant to that policy:

NOTICE: The user's attention is called to the possibility that compliance with an NFPA Standard may require use of an invention covered by patent rights. NFPA takes no position as to the validity of any such patent rights or as to whether such patent rights constitute or include essential patent claims under the ANSI Patent Policy. If, in connection with the ANSI Patent Policy, a patent holder has filed a statement of willingness to grant licenses under these rights on reasonable and nondiscriminatory terms and conditions to applicants desiring to obtain such a license, copies of such filed statements can be obtained, on request, from NFPA. For further information, contact the NFPA at the address listed below.

Law and Regulations

Users of NFPA Standards should consult applicable federal, state, and local laws and regulations. NFPA does not, by the publication of its codes, standards, recommended practices, and guides, intend to urge action that is not in compliance with applicable laws, and these documents may not be construed as doing so.

Copyrights

NFPA Standards are copyrighted. They are made available for a wide variety of both public and private uses. These include both use, by reference, in laws and regulations, and use in private self-regulation, standardization, and the promotion of safe practices and methods. By making these documents available for use and adoption by public authorities and private users, the NFPA does not waive any rights in copyright to these documents.

Use of NFPA Standards for regulatory purposes should be accomplished through adoption by reference. The term "adoption by reference" means the citing of title, edition, and publishing information only. Any deletions, additions, and changes desired by the adopting authority should be noted separately in the adopting instrument. In order to assist NFPA in following the uses made of its documents, adopting authorities are requested to notify the NFPA (Attention: Secretary, Standards Council) in writing of such use. For technical assistance and questions concerning adoption of NFPA Standards, contact NFPA at the address below.

For Further Information

All questions or other communications relating to NFPA Standards and all requests for information on NFPA procedures governing its codes and standards development process, including information on the procedures for requesting Formal Interpretations, for proposing Tentative Interim Amendments, and for proposing revisions to NFPA standards during regular revision cycles, should be sent to NFPA headquarters, addressed to the attention of the Secretary, Standards Council, NFPA, 1 Batterymarch Park, P.O. Box 9101, Quincy, MA 02269-9101; email: stds_admin@nfpa.org.

For more information about NFPA, visit the NFPA website at www.nfpa.org. All NFPA codes and standards can be viewed at no cost at www.nfpa.org/docinfo.

Copyright © 2021 National Fire Protection Association®. All Rights Reserved.

NFPA® 13D

Standard for the

Installation of Sprinkler Systems in One- and Two-Family Dwellings and Manufactured Homes

2022 Edition

This edition of NFPA 13D, *Standard for the Installation of Sprinkler Systems in One- and Two-Family Dwellings and Manufactured Homes*, was prepared by the Technical Committee on Residential Sprinkler Systems and released by the Correlating Committee on Automatic Sprinkler Systems. It was issued by the Standards Council on March 18, 2021, with an effective date of April 8, 2021, and supersedes all previous editions.

This edition of NFPA 13D was approved as an American National Standard on April 8, 2021.

Origin and Development of NFPA 13D

Recognizing the need to reduce the annual life loss from fire in residential occupancies (about 50 percent of total loss of life by fire), the Committee on Automatic Sprinklers appointed a subcommittee in May 1973 to prepare the *Standard on the Installation of Sprinkler Systems in One- and Two-Family Dwellings and Mobile Homes*. The subcommittee was composed of members of the Committee on Automatic Sprinklers and other technically competent experts. The standard was submitted and adopted at the NFPA Annual Meeting in Chicago, Illinois, on May 12–16, 1975.

The 1980 edition was a complete rewrite of the 1975 edition, including SI units where appropriate. The 1980 edition incorporated the results of the residential sprinkler test program administered by the National Fire Protection Association and funded by a research grant from the United States Fire Administration. Factory Mutual Research Corporation and the Los Angeles City Fire Department conducted the dwelling tests. Factory Mutual Research Corporation, McNeary Insurance Consulting Services, and the Charlotte, North Carolina, Fire Department conducted the mobile home tests.

After gaining practical experience using the 1980 edition, modifications to the standard, including removal of design parameters for dry pipe systems, were made in the 1984 edition.

The 1989 and 1991 editions established criteria for the use of antifreeze systems as well as some of the installation criteria associated with specially listed piping materials.

The 1994 edition provided expanded information on nonmetallic pipe and introduced a new design option that reduced water storage requirements for limited area dwellings.

The 1996 edition of the standard included expanded information on the use and placement of residential sprinklers near heat sources. For the first time since 1941, the use of ½ in. (12.7 mm) piping material was permitted again for sprinkler systems under specific conditions. Several appendix figures were also added to address methods for protecting pipe from freezing in unheated attics.

The 1999 edition revised criteria for certain types of multipurpose piping systems and added requirements to mitigate the effect of water softeners and filters on system performance. Information on the application of solvent cement for nonmetallic piping systems was provided, and the exception for omitting sprinkler coverage in attics and crawl spaces was modified.

The 2002 edition incorporated revisions to update the standard to comply with the 2000 edition of the *Manual of Style for NFPA Technical Committee Documents*. These revisions included editorially rewording any exceptions as requirements. The 2002 edition also included changes that established a minimum design discharge density. The requirements for multipurpose systems were changed to require a bypass valve for installations with water softeners or water filtration equipment installed

NFPA and National Fire Protection Association are registered trademarks of the National Fire Protection Association, Quincy, Massachusetts 02169.

and to update the requirements for network systems. The chapter specifically addressing limited area dwelling systems was no longer included in the standard.

The 2007 edition included new spacing and obstruction rules addressing sloped ceilings, ceiling pockets, ceiling fans, and kitchen cabinets. Also new to this edition were installation, design, and acceptance requirements for pumps. The acceptability of insulation as a method of freeze protection and the acceptability of wells as a water source were clarified for this edition. New requirements for listed dry pipe/preaction residential sprinkler systems, as well as clarified requirements for multipurpose combined and networked sprinkler systems, were incorporated. Finally, specific obstruction rules were added for residential sprinklers.

In the 2010 edition, new requirements were added for a prescriptive pipe sizing method as an alternative to the hydraulic calculation method. The standard added the term *townhouses* to the definition of *dwelling* to clarify that townhouses that meet the definition of *dwelling* can be protected by an NFPA 13D system. Finally, annex material was added to provide clear guidance for the owner on how to properly inspect, test, and maintain the system.

The 2013 edition of NFPA 13D included a restructuring to make the document easier to use. Four new chapters were added, breaking out freeze protection, acceptance testing, maintenance, and discharge criteria into their own chapters. This edition has also seen modification to the definitions of *multipurpose* and *stand-alone systems*, along with a new definition for *passive purge systems*. New language addressing the number of heads to be calculated for certain sloped and beamed ceiling configurations was added based on a Fire Protection Research Foundation report. The antifreeze requirements were updated through a series of TIAs that were developed based on FPRF testing.

Several significant revisions were made during the development of the 2016 edition. A new figure addressed positioning of sprinklers to avoid obstructions where there are sloped ceilings. Clarification was added that once a sprinkler is removed from a fitting or welded outlet it should not be reinstalled if torque was applied to the sprinkler itself. A new sketch showed an insulation practice using tenting in an attic or concealed space. One of the largest changes to the 2016 edition of NFPA 13D was the review of all metric conversions. Historically the document had used an "exact" conversion process, but in the 2016 edition an approximate conversion process was used. The intent of this change was to make the document more usable outside the United States.

The 2019 edition added beam rules for sprinklers installed under and adjacent to beams (with new figures), requirements for closets where ventless clothes dryers are installed, and requirements where pressure-reducing and pressure-regulating valves are installed. A section has been added to Chapter 12 to address inactive systems in structures left vacant for a period of time. Requirements for the use of well pumps as a water supply have been clarified. In addition, images have been added to clarify sprinkler location and clearances needed around fireplaces.

The 2022 edition revised the scope adding townhouses. Criteria for the protection of pipe or tube from mechanical damage has been added to Chapter 5 and multipurpose and passive purge systems to Chapter 7. The criteria for sprinklers under or adjacent to beams was revised adding concealed sprinklers, and the obstruction tables have been modified for ease of use. Further clarifications have been made to the sections in Chapter 8 addressing fuel fired equipment and the need for sprinkler protection. A new section on tiny homes has been added to Chapter 8. The method for determining when system components are subject to freezing and need protection has been modified; it now requires the use of current temperature data. A new annex on the incentives for residential fire sprinkler use and advantages for builders, developers, and communities has been added.

Correlating Committee on Automatic Sprinkler Systems

William E. Koffel, *Chair*
Koffel Associates, Inc, MD [SE]

Roland A. Asp, National Fire Sprinkler Association, Inc., MD [M]
Rep. National Fire Sprinkler Association

Jose R. Baz, JRB Associates Group Inc., FL [M]
Rep. NFPA Latin American Section

Kerry M. Bell, UL LLC, IL [RT]

Tracey D. Bellamy, Telgian Corporation, GA [U]
Rep. The Home Depot

Chase A. Browning, Medford Fire Department, OR [E]

Steven W. Dellasanta, Jensen Hughes Associates, Inc., RI [SE]

John August Denhardt, American Fire Sprinkler Association (AFSA), TX [IM]
Rep. American Fire Sprinkler Association

Michael J. Friedman, Friedman Consulting, Inc, MD [SE]

Alex Hoffman, Viking Fire Protection Inc., Canada [IM]
Rep. Canadian Automatic Sprinkler Association

Sultan M. Javeri, SC Engineering, France [IM]

Charles W. Ketner, National Automatic Sprinkler Fitters LU 669, MD [L]
Rep. United Assn. of Journeymen & Apprentices of the Plumbing & Pipe Fitting Industry

James D. Lake, Viking Corporation, MI [M]

John A. LeBlanc, FM Global, MA [I]

Kenneth W. Linder, Swiss Re, CT [I]

David O. Lowrey, City of Boulder Fire Rescue, CO [E]

Bryan Edwin Matthews, Liberty Mutual Group, NY [I]

Garner A. Palenske, Wiss Janney Elstner Associates, Inc., CA [SE]

Lawrence Richard Phillips, US Department of the Navy, VA [E]

Adam Seghi, Coda Risk Analysis, TX [I]

Joseph Su, National Research Council of Canada, Canada [RT]

J. Michael Thompson, GHD/The Protection Engineering Group, PC, VA [SE]

Alternates

Ralph E. Bless, Jr., Telgian Corporation, GA [U]
(Alt. to Tracey D. Bellamy)

Bruce H. Clarke, American International Group, Inc. (AIG), SC [I]
(Alt. to Adam Seghi)

Russell P. Fleming, Northeast Fire Suppression Associates, LLC, NH [SE]
(Alt. to Michael J. Friedman)

Scott T. Franson, The Viking Corporation, MI [M]
(Alt. to James D. Lake)

David B. Fuller, FM Approvals, RI [I]
(Alt. to John A. LeBlanc)

Jeffrey E. Harper, JENSEN HUGHES, IL [SE]
(Alt. to Steven W. Dellasanta)

Jeff Hebenstreit, UL LLC, IL [RT]
(Alt. to Kerry M. Bell)

Jeffrey M. Hugo, National Fire Sprinkler Association, Inc., MI [M]
(Alt. to Roland A. Asp)

Jack A. Medovich, Fire & Life Safety America, MD [IM]
(Alt. to John August Denhardt)

Donato A. Pirro, Electro Sistemas De Panama, S.A., Panama [M]
(Alt. to Jose R. Baz)

Jason W. Ryckman, Canadian Automatic Sprinkler Association, Canada [IM]
(Alt. to Alex Hoffman)

Douglas Paul Stultz, US Department of the Navy, VA [E]
(Alt. to Lawrence Richard Phillips)

Jeffrey J. Van Rhyn, Jr., Local 669 JATC, NV [L]
(Alt. to Charles W. Ketner)

Nonvoting

James B. Biggins, TUV SUD America Inc./Global Risk Consultants Corporation, IL [SE]
Rep. TC on Hanging & Bracing of Water-Based Systems

Christopher I. Deneff, FM Global, RI [I]
Rep. TC on Hanging & Bracing of Water-Based Systems

Raymond A. Grill, Arup, DC [SE]
Rep. TC on Sprinkler System Installation Criteria

Kenneth E. Isman, University of Maryland, MD [SE]
Rep. TC on Residential Sprinkler Systems

Russell B. Leavitt, Telgian Corporation, AZ [U]
Rep. TC on Sprinkler System Discharge Criteria

John J. Walsh, UA Joint Apprenticeship Committee Local 669, MD [SE]
Rep. United Assn. of Journeymen & Apprentices of the Plumbing & Pipe Fitting Industry
(Member Emeritus)

Chad Duffy, NFPA Staff Liaison

This list represents the membership at the time the Committee was balloted on the final text of this edition. Since that time, changes in the membership may have occurred. A key to classifications is found at the back of the document.

NOTE: Membership on a committee shall not in and of itself constitute an endorsement of the Association or any document developed by the committee on which the member serves.

Committee Scope: This Committee shall have overall responsibility for documents that pertain to the criteria for the design and installation of automatic, open and foam-water sprinkler systems including the character and adequacy of water supplies, and the selection of sprinklers, piping, valves, and all materials and accessories. This Committee does not cover the installation of tanks and towers, nor the installation, maintenance, and use of

central station, proprietary, auxiliary, and local signaling systems for watchmen, fire alarm, supervisory service, nor the design of fire department hose connections.

Technical Committee on Residential Sprinkler Systems

Kenneth E. Isman, *Chair*
University of Maryland, MD [SE]

Roland A. Asp, National Fire Sprinkler Association, Inc., MD [M]

Kerry M. Bell, UL LLC, IL [RT]

Fred Benn, Advanced Automatic Sprinkler, Inc., CA [IM]

Jonathan C. Bittenbender, REHAU Incorporated, VA [M]

Chase A. Browning, Medford Fire Department, OR [E]

Bradford T. Cronin, Newport Fire Department, RI [E]

John August Denhardt, American Fire Sprinkler Association (AFSA), TX [IM]
Rep. American Fire Sprinkler Association

Jeffrey Feid, State Farm Insurance Company, IL [I]

Cesar Lujan, National Association of Home Builders (NAHB), DC [U]
Rep. National Association of Home Builders

Michael O'Brian, Brighton Area Fire Authority, MI [E]
Rep. International Association of Fire Chiefs

Wade Palazini, JENSEN HUGHES, RI [SE]

Darren Palmieri, The Viking Corporation, MI [M]

Maurice M. Pilette, Mechanical Designs Ltd., MA [SE]

Milosh T. Puchovsky, Worcester Polytechnic Institute, MA [SE]

Jason W. Ryckman, Canadian Automatic Sprinkler Association, Canada [IM]
Rep. Canadian Automatic Sprinkler Association

Peter T. Schwab, Wayne Automatic Fire Sprinklers, Inc., FL [IM]

Eric J. Skare, Uponor, Inc., MN [M]

George W. Stanley, Wiginton Fire Protection Engineering, Inc., FL [IM]

Donald R. Townley, Lubrizol, OH [M]

Martin C. W. Trim, Barrett Engineered Pumps, CA [SE]
Rep. American Society of Plumbing Engineers

Jeffrey J. Van Rhyn, Jr., Local 669 JATC, NV [L]
Rep. United Assn. of Journeymen & Apprentices of the Plumbing & Pipe Fitting Industry

Ed Van Walraven, Basalt And Rural Fire Protection District, CO [E]

Terry L. Victor, Johnson Controls, MD [M]

John F. Viola, JFV Engineering, LLC, MA [IM]
Rep. American Fire Sprinkler Association

Ronald N. Webb, S.A. Comunale Company, Inc., OH [IM]
Rep. National Fire Sprinkler Association

Steven D. Wolin, Reliable Automatic Sprinkler Company, Inc., SC [M]
Rep. National Fire Sprinkler Association

Hong-Zeng Yu, FM Global, MA [I]

Alternates

Jon R. Ackley, Dalmatian Fire, IN [IM]
(Alt. to Ronald N. Webb)

Robert S. Blach, Menlo Park Fire Protection District, CA [E]
(Alt. to Michael O'Brian)

Katherine M. Clay, Jackson Hole Fire/EMS, WY [E]
(Alt. to Ed Van Walraven)

Samuel S. Dannaway, Coffman Engineers, HI [SE]
(Alt. to Martin C. W. Trim)

John Desrosier, Globe Fire Sprinkler Corporation, MI [M]
(Alt. to Steven D. Wolin)

Robert L. Dufault, Newport Fire Department, RI [E]
(Alt. to Bradford T. Cronin)

Gary Ehrlich, National Association of Home Builders (NAHB), DC [U]
(Alt. to Cesar Lujan)

Mark E. Fessenden, Johnson Controls, WI [M]
(Alt. to Terry L. Victor)

Yogish Gopala, FM Global, MA [I]
(Alt. to Hong-Zeng Yu)

Forest Hampton, Lubrizol Advanced Materials, Inc., OH [M]
(Alt. to Donald R. Townley)

Jeff Hebenstreit, UL LLC, IL [RT]
(Alt. to Kerry M. Bell)

Brent Kotula, Uponor, MN [M]
(Alt. to Eric J. Skare)

David O. Lowrey, City of Boulder Fire Rescue, CO [E]
(Alt. to Chase A. Browning)

James R. Lugar, JENSEN HUGHES, MD [SE]
(Alt. to Wade Palazini)

Daniel J. Mathias, Absolute Fire Protection, Inc., MD [IM]
(Alt. to John August Denhardt)

Dan Mendoza, Advanced Automatic Sprinkler, CA [IM]
(Alt. to Fred Benn)

Matthew Osburn, Canadian Automatic Sprinkler Association, Canada [IM]
(Alt. to Jason W. Ryckman)

Ryan Lee Peterson, Wayne Auto Fire Sprinklers, FL [IM]
(Alt. to Peter T. Schwab)

William Scott Roberts, Quick Response Fire Protection, NJ [M]
(Alt. to Roland A. Asp)

Ernesto Rodriguez, Jr., Wiginton Fire Protection Engineering, Inc., FL [IM]
(Alt. to George W. Stanley)

Ralph D Young, Sprinkler Fitters Local 669, NY [L]
(Alt. to Jeffrey J. Van Rhyn, Jr.)

Brent Zimiga, Rapid Fire Protection Inc., SD [IM]
(Alt. to John Viola)

Nonvoting

Rohit "Rik" Khanna, US Consumer Product Safety Commission (CPSC), MD [C]
Rep. US Consumer Product Safety Commission (CPSC)

Chad Duffy, NFPA Staff Liaison

This list represents the membership at the time the Committee was balloted on the final text of this edition. Since that time, changes in the membership may have occurred. A key to classifications is found at the back of the document.

NOTE: Membership on a committee shall not in and of itself constitute an endorsement of the Association or any document developed by the committee on which the member serves.

Committee Scope: This Committee shall have primary responsibility for documents on the design and installation of automatic sprinkler systems in dwellings and residential occupancies up to and including four stories in height, including the character and adequacy of water supplies, and the selection of sprinklers, piping, valves, and all materials and accessories. In addition, this Committee shall have primary responsibility of inspection, testing, and maintenance requirements for sprinkler systems installed in one-and two-family dwellings and manufactured homes.

Contents

Chapter 1 Administration **13D–** 8
1.1 Scope. **13D–** 8
1.2 Purpose. **13D–** 8
1.3 Retroactivity. **13D–** 8
1.4 Equivalency. **13D–** 8
1.5 Units. **13D–** 8
1.6 New Technology. **13D–** 9

Chapter 2 Referenced Publications **13D–** 9
2.1 General. **13D–** 9
2.2 NFPA Publications. **13D–** 9
2.3 Other Publications. **13D–** 9
2.4 References for Extracts in Mandatory Sections. **13D–** 9

Chapter 3 Definitions **13D–** 10
3.1 General. **13D–** 10
3.2 NFPA Official Definitions. **13D–** 10
3.3 General Definitions. **13D–** 10

Chapter 4 General Requirements **13D–** 11
4.1 Sprinkler Temperature Ratings. **13D–** 11
4.2 Tube. **13D–** 11
4.3 Listed or Labeled. **13D–** 11
4.4 Documentation. **13D–** 11
4.5 Qualifications. **13D–** 11

Chapter 5 System Components **13D–** 11
5.1 General. **13D–** 11
5.2 Aboveground Pipe and Equipment. **13D–** 12
5.3 Water Supply Pipe and Fittings. **13D–** 13
5.4 Pre-Engineered Systems. **13D–** 13

Chapter 6 Water Supply **13D–** 13
6.1 General Provisions. **13D–** 13
6.2 Water Supply Sources. **13D–** 14
6.3 Multipurpose Piping System. **13D–** 14
6.4 Manufactured Home Water Supply. **13D–** 14
6.5 Common Supply Pipes. **13D–** 14

Chapter 7 Installation **13D–** 14
7.1 Valves. **13D–** 14
7.2 Drains and Test Connections. **13D–** 15
7.3 Pressure Gauges. **13D–** 15
7.4 Piping Support. **13D–** 15
7.5 Sprinklers. **13D–** 15
7.6 Alarms. **13D–** 15
7.7 Attics. **13D–** 15
7.8 Multipurpose and Passive Purge Systems. **13D–** 15

Chapter 8 Sprinkler Position and Location **13D–** 16
8.1 Design Criteria. **13D–** 16
8.2 Position of Sprinklers. **13D–** 17
8.3 Location of Sprinklers. **13D–** 21

Chapter 9 Protection from Freezing **13D–** 23
9.1 System Types. **13D–** 23
9.2 Antifreeze Systems. **13D–** 23
9.3 Dry Pipe and Preaction Systems. **13D–** 24

Chapter 10 Discharge and Hydraulic Calculations **13D–** 25
10.1 Design Discharge. **13D–** 25
10.2 Number of Design Sprinklers. **13D–** 25
10.3 Piping Configurations. **13D–** 25
10.4 Pipe Sizing. **13D–** 25

Chapter 11 System Acceptance **13D–** 36
11.1 General. **13D–** 36
11.2 Acceptance Tests. **13D–** 36

Chapter 12 Inspection, Testing, and Maintenance **13D–** 36
12.1 General. **13D–** 36
12.2 Inspections and Tests. **13D–** 36
12.3 Maintenance. **13D–** 36

Annex A Explanatory Material **13D–** 37

Annex B Incentives for Residential Fire Sprinkler Use — Advantages for Builders, Developers, and Communities **13D–** 61

Annex C Informational References **13D–** 66

Index **13D–** 68

NFPA 13D

Standard for the

Installation of Sprinkler Systems in One- and Two-Family Dwellings and Manufactured Homes

2022 Edition

IMPORTANT NOTE: This NFPA document is made available for use subject to important notices and legal disclaimers. These notices and disclaimers appear in all publications containing this document and may be found under the heading "Important Notices and Disclaimers Concerning NFPA Standards." They can also be viewed at www.nfpa.org/disclaimers or obtained on request from NFPA.

UPDATES, ALERTS, AND FUTURE EDITIONS: New editions of NFPA codes, standards, recommended practices, and guides (i.e., NFPA Standards) are released on scheduled revision cycles. This edition may be superseded by a later one, or it may be amended outside of its scheduled revision cycle through the issuance of Tentative Interim Amendments (TIAs). An official NFPA Standard at any point in time consists of the current edition of the document, together with all TIAs and Errata in effect. To verify that this document is the current edition or to determine if it has been amended by TIAs or Errata, please consult the National Fire Codes® Subscription Service or the "List of NFPA Codes & Standards" at www.nfpa.org/docinfo. In addition to TIAs and Errata, the document information pages also include the option to sign up for alerts for individual documents and to be involved in the development of the next edition.

NOTICE: An asterisk (*) following the number or letter designating a paragraph indicates that explanatory material on the paragraph can be found in Annex A.

A reference in brackets [ ] following a section or paragraph indicates material that has been extracted from another NFPA document. Extracted text may be edited for consistency and style and may include the revision of internal paragraph references and other references as appropriate. Requests for interpretations or revisions of extracted text shall be sent to the technical committee responsible for the source document.

Information on referenced and extracted publications can be found in Chapter 2 and Annex C.

Chapter 1 Administration

1.1* Scope.

1.1.1 This standard shall cover the design, installation, and maintenance of automatic sprinkler systems for protection against the fire hazards in one- and two-family dwellings, manufactured homes, and townhouses.

1.1.2 This standard shall not provide requirements for the design or installation of water mist fire protection systems, which are not considered fire sprinkler systems and are addressed by NFPA 750.

1.1.3 This standard shall be based on the concept that the sprinkler system is designed to protect against a fire originating from a single ignition location.

1.2* Purpose.

1.2.1 The purpose of this standard shall be to provide a sprinkler system that aids in the detection and control of residential fires and thus provides improved protection against injury and life loss.

1.2.2 A sprinkler system shall be designed and installed in accordance with this standard to prevent flashover (total involvement) in the room of fire origin, where sprinklered, and to improve the chance for occupants to escape or be evacuated.

1.3 Retroactivity. The provisions of this standard reflect a consensus of what is necessary to provide an acceptable degree of protection from the hazards addressed in this standard at the time the standard was issued.

1.3.1 Unless otherwise specified, the provisions of this standard shall not apply to facilities, equipment, structures, or installations that existed or were approved for construction or installation prior to the effective date of the standard. Where specified, the provisions of this standard shall be retroactive.

1.3.2 In those cases where the authority having jurisdiction determines that the existing situation presents an unacceptable degree of risk, the authority having jurisdiction shall be permitted to apply retroactively any portions of this standard deemed appropriate.

1.3.3 The retroactive requirements of this standard shall be permitted to be modified if their application clearly would be impractical in the judgment of the authority having jurisdiction, and only where it is clearly evident that a reasonable degree of safety is provided.

1.4 Equivalency. Nothing in this standard is intended to prevent the use of systems, methods, or devices of equivalent or superior quality, strength, fire resistance, effectiveness, durability, and safety over those prescribed by this standard.

1.4.1 Technical documentation shall be submitted to the authority having jurisdiction to demonstrate equivalency.

1.4.2 The system, method, or device shall be approved for the intended purpose by the authority having jurisdiction.

1.5 Units.

1.5.1* Metric units of measurement in this standard shall be in accordance with the modernized metric system known as the International System of Units (SI).

1.5.2 The liter and bar units shall be permitted to be used in this standard.

1.5.3 The conversion factors for liter, pascal, and bar shall be in accordance with Table 1.5.3.

Table 1.5.3 Metric Conversions

Name of Unit	Unit Symbol	Conversion Factor
liter	L	1 gal = 3.785 L
pascal	Pa	1 psi = 6894.757 Pa
bar	bar	1 psi = 0.0689 bar
bar	bar	1 bar = 10^5 Pa

1.5.4* Where a value for measurement as specified in this standard is followed by an equivalent value in other units, the first stated value shall be regarded as the requirement.

1.5.5 The equivalent value for a measurement in SI shall be converted by multiplying the value by the conversion factor and then rounding the result to the appropriate number of significant digits.

1.6 New Technology.

1.6.1 Nothing in this standard shall be intended to restrict new technologies or alternate arrangements, provided the level of safety prescribed by this standard is not lowered.

1.6.2 Materials or devices not specifically designated by this standard shall be utilized in complete accord with all conditions, requirements, and limitations of their listings.

Chapter 2 Referenced Publications

2.1 General. The documents or portions thereof listed in this chapter are referenced within this standard and shall be considered part of the requirements of this document.

2.2 NFPA Publications. National Fire Protection Association, 1 Batterymarch Park, Quincy, MA 02169-7471.

NFPA 13, *Standard for the Installation of Sprinkler Systems*, 2022 edition.

NFPA 70®, National Electrical Code®, 2020 edition.

NFPA 72®, National Fire Alarm and Signaling Code®, 2022 edition.

NFPA 220, *Standard on Types of Building Construction*, 2021 edition.

NFPA 750, *Standard on Water Mist Fire Protection Systems*, 2019 edition.

2.3 Other Publications.

2.3.1 ASME Publications. American Society of Mechanical Engineers, Two Park Avenue, New York, NY 10016-5990.

ASME B16.1, *Gray Iron Pipe Flanges and Flanged Fittings: Classes 25, 125, and 250*, 2015.

ASME B16.3, *Malleable Iron Threaded Fittings: Classes 150 and 300*, 2016.

ASME B16.4, *Gray Iron Threaded Fittings: Classes 125 and 250*, 2016.

ASME B16.5, *Pipe Flanges and Flanged Fittings: NPS 1/2 through NPS 24 Metric/Inch Standard*, 2017.

ASME B16.9, *Factory-Made Wrought Buttwelding Fittings*, 2018.

ASME B16.11, *Forged Fittings, Socket-Welding and Threaded*, 2016.

ASME B16.15, *Cast Copper Alloy Threaded Fittings: Classes 125 and 250*, 2018.

ASME B16.18, *Cast Copper Alloy Solder-Joint Pressure Fittings*, 2018.

ASME B16.22, *Wrought Copper and Copper Alloy Solder-Joint Pressure Fittings*, 2018.

ASME B16.25, *Buttwelding Ends*, 2017.

ASME B36.10M, *Welded and Seamless Wrought Steel Pipe*, 2018.

2.3.2 ASTM Publications. ASTM International, 100 Barr Harbor Drive, P.O. Box C700, West Conshohocken, PA 19428-2959.

ASTM A53/A53M, *Standard Specification for Pipe, Steel, Black and Hot-Dipped, Zinc-Coated, Welded and Seamless*, 2018.

ASTM A135/A135M, *Standard Specification for Electric-Resistance-Welded Steel Pipe*, 2019.

ASTM A234/A234M, *Standard Specification for Piping Fittings of Wrought Carbon Steel and Alloy Steel for Moderate and High Temperature Service*, 2019.

ASTM A795/A795M, *Standard Specification for Black and Hot-Dipped Zinc-Coated (Galvanized) Welded and Seamless Steel Pipe for Fire Protection Use*, 2013 (2020).

ASTM B32, *Standard Specification for Solder Metal*, 2008, reapproved 2014.

ASTM B43, *Standard Specification for Seamless Red Brass Pipe, Standard Sizes*, 2020.

ASTM B75/B75M, *Standard Specification for Seamless Copper Tube*, 2020.

ASTM B88, *Standard Specification for Seamless Copper Water Tube*, 2020.

ASTM B251/B251M, *Standard Specification for General Requirements for Wrought Seamless Copper and Copper-Alloy Tube*, 2017.

ASTM B813, *Standard Specification for Liquid and Paste Fluxes for Soldering of Copper and Copper-Alloy Tube*, 2016.

ASTM B828, *Standard Practice for Making Capillary Joints by Soldering of Copper and Copper Alloy Tube and Fittings*, 2016.

ASTM F437, *Standard Specification for Threaded Chlorinated Poly(Vinyl Chloride) (CPVC) Plastic Pipe Fittings, Schedule 80*, 2015.

ASTM F438, *Standard Specification for Socket-Type Chlorinated Poly(Vinyl Chloride) (CPVC) Plastic Pipe Fittings, Schedule 40*, 2017.

ASTM F439, *Standard Specification for Chlorinated Poly (Vinyl Chloride) (CPVC) Plastic Pipe Fittings, Schedule 80*, 2019.

ASTM F442/F442M, *Standard Specification for Chlorinated Poly(Vinyl Chloride) (CPVC) Plastic Pipe (SDR–PR)*, 2019.

ASTM F876, *Standard Specification for Crosslinked Polyethylene (PEX) Tubing*, 2019a.

2.3.3 AWS Publications. American Welding Society, 8669 NW 36 Street, #130, Miami, FL 33166-6672.

AWS A5.8M/A5.8, *Specification for Filler Metals for Brazing and Braze Welding*, 2011, Amendment 1, 2012.

2.3.4 Other Publications.

Merriam-Webster's Collegiate Dictionary, 11th edition, Merriam-Webster, Inc., Springfield, MA, 2003.

2.4 References for Extracts in Mandatory Sections.

NFPA 13R, *Standard for the Installation of Sprinkler Systems in Low-Rise Residential Occupancies*, 2022 edition.

Chapter 3 Definitions

3.1 General. The definitions contained in this chapter shall apply to the terms used in this standard. Where terms are not defined in this chapter or within another chapter, they shall be defined using their ordinarily accepted meanings within the context in which they are used. *Merriam-Webster's Collegiate Dictionary*, 11th edition, shall be the source for the ordinarily accepted meaning.

3.2 NFPA Official Definitions.

3.2.1* Approved. Acceptable to the authority having jurisdiction.

3.2.2* Authority Having Jurisdiction (AHJ). An organization, office, or individual responsible for enforcing the requirements of a code or standard, or for approving equipment, materials, an installation, or a procedure.

3.2.3 Labeled. Equipment or materials to which has been attached a label, symbol, or other identifying mark of an organization that is acceptable to the authority having jurisdiction and concerned with product evaluation, that maintains periodic inspection of production of labeled equipment or materials, and by whose labeling the manufacturer indicates compliance with appropriate standards or performance in a specified manner.

3.2.4* Listed. Equipment, materials, or services included in a list published by an organization that is acceptable to the authority having jurisdiction and concerned with evaluation of products or services, that maintains periodic inspection of production of listed equipment or materials or periodic evaluation of services, and whose listing states that either the equipment, material, or service meets appropriate designated standards or has been tested and found suitable for a specified purpose.

3.2.5 Shall. Indicates a mandatory requirement.

3.2.6 Should. Indicates a recommendation or that which is advised but not required.

3.2.7 Standard. An NFPA Standard, the main text of which contains only mandatory provisions using the word "shall" to indicate requirements and that is in a form generally suitable for mandatory reference by another standard or code or for adoption into law. Nonmandatory provisions are not to be considered a part of the requirements of a standard and shall be located in an appendix, annex, footnote, informational note, or other means as permitted in the NFPA Manuals of Style. When used in a generic sense, such as in the phrase "standards development process" or "standards development activities," the term "standards" includes all NFPA Standards, including Codes, Standards, Recommended Practices, and Guides.

3.3 General Definitions.

3.3.1 Back-to-Back Townhouse. See 3.3.16.1.

3.3.2* Bathroom. Within a dwelling unit, any room or compartment containing a lavatory dedicated to personal hygiene, or a water closet, or bathing capability such as a shower or tub, or any combination of facilities thereof.

3.3.3 Compartment. A space completely enclosed by walls and a ceiling. Each wall in the compartment is permitted to have openings to an adjoining space if the openings have a minimum lintel depth of 8 in. (200 mm) from the ceiling and the total width of the openings in a single wall does not exceed 8 ft (2.4 m) in width. A single opening of 36 in. (900 mm) or less in width without a lintel is permitted when there are no other openings to adjoining spaces.

3.3.4 Design Discharge. The rate of water discharged by an automatic sprinkler expressed in gpm (mm/min).

3.3.5 Dwelling. Any detached building, or any part of a townhouse, back-to-back townhouse, or stacked townhouse structure that is separated from the remainder of the townhouse structure with fire resistance rated assemblies in accordance with local building code, that contains no more than two dwelling units intended to be used, rented, leased, let, or hired out to be occupied or that are occupied for habitation purposes.

3.3.6 Dwelling Unit. One or more rooms, arranged for the use of one or more individuals living together, as in a single housekeeping unit, that normally have cooking, living, sanitary, and sleeping facilities.

3.3.7* Manufactured Home. A structure, transportable in one or more sections, which, in the traveling mode, is 8 body-ft (2.4 m) or more in width or 40 body-ft (12 m) or more in length or, when erected on site, is 320 ft^2 (30 m^2) or more and which is built on a permanent chassis and designed to be used as a dwelling, with or without a permanent foundation, when connected to the required utilities, and includes plumbing, heating, air-conditioning, and electrical systems contained therein; except that such terms include any structure that meets all the requirements of this paragraph except the size requirements and with respect to which the manufacturer voluntarily files a certification required by the regulatory agency. Calculations used to determine the number of square feet in a structure are based on the structure's exterior dimensions, measured at the largest horizontal projections when erected on site. These dimensions include all expandable rooms, cabinets, and other projections containing interior space, but do not include bay windows.

3.3.8* Premixed Antifreeze Solution. A mixture of an antifreeze material with water that is prepared and factory-mixed by the manufacturer with a quality control procedure in place that ensures that the antifreeze solution remains homogeneous and that the concentration is as specified.

3.3.9 Pressure.

3.3.9.1 ***Supply Pressure.*** The pressure within the supply (e.g., city or private supply water source).

3.3.9.2 ***System Pressure.*** The pressure within the system (e.g., above the control valve).

3.3.9.3 ***System Working Pressure.*** The maximum anticipated static (nonflowing) or flowing pressure applied to sprinkler system components exclusive of surge pressures.

3.3.10 Pump. A mechanical device that transfers or raises, or transfers and raises, the pressure of a fluid (water).

3.3.11* Shadow Area. The dry floor area within the protection area of a sprinkler created by the portion of sprinkler discharge that is blocked by a wall or partition.

3.3.12 Sprinkler.

3.3.12.1 ***Automatic Sprinkler.*** A fire suppression or control device that operates automatically when its heat-actuated element is heated to its thermal rating or above, allowing water to discharge over a specific area.

3.3.12.2 ***Residential Sprinkler.*** A type of fast-response sprinkler having a thermal element with an RTI of 50 (meters-seconds)$^{1/2}$ or less, that has been specifically investigated for its ability to enhance survivability in the room of fire origin, and that is listed for use in the protection of dwelling units.

3.3.13 Sprinkler Systems.

3.3.13.1 ***Antifreeze Sprinkler System.*** A wet pipe system using automatic sprinklers that contains a liquid solution to prevent freezing of the system, intended to discharge the solution upon sprinkler operation, followed immediately by water from a water supply.

3.3.13.2 ***Dry Pipe Sprinkler System.*** A sprinkler system employing automatic sprinklers that are attached to a piping system containing air or nitrogen under pressure, the release of which (as from the opening of a sprinkler) permits the water pressure to open a valve known as a dry pipe valve, and the water then flows into the piping system and out the opened sprinkler.

3.3.13.3* ***Multipurpose Piping Sprinkler System.*** A piping system intended to serve both domestic needs in excess of a single fixture and fire protection needs from one common piping system throughout the dwelling unit(s).

3.3.13.4* ***Network Sprinkler System.*** A type of multipurpose system utilizing a common piping system supplying domestic fixtures and fire sprinklers where each sprinkler is supplied by a minimum of three separate paths.

3.3.13.5* ***Passive Purge Sprinkler System.*** A type of sprinkler system that serves a single toilet in addition to the fire sprinklers.

3.3.13.6 ***Preaction Sprinkler System.*** A sprinkler system employing automatic sprinklers that are attached to a piping system that contains air that might or might not be under pressure, with a supplemental detection system installed in the same areas as the sprinklers.

3.3.13.7 ***Pre-Engineered Sprinkler System.*** A packaged sprinkler system including all components connected to the water supply and designed to be installed according to pretested limitations.

3.3.13.8 ***Sprinkler System.*** A system that consists of an integrated network of piping designed in accordance with fire protection engineering standards that includes a water supply source, a water control valve, and a drain. The portion of the sprinkler system above ground is a network of specifically sized or hydraulically designed piping installed in a building, structure, or area, generally overhead, and to which sprinklers are attached in a systematic pattern. The system is commonly activated by heat from a fire and discharges water over the fire area.

3.3.13.9* ***Stand-Alone Sprinkler System.*** A sprinkler system where the aboveground piping serves only fire sprinklers.

3.3.13.10 ***Wet Pipe Sprinkler System.*** A sprinkler system employing automatic sprinklers attached to a piping system containing water and connected to a water supply so that water discharges immediately from sprinklers opened by heat from a fire.

3.3.14 Townhouse. A one-family dwelling constructed in attached groups of three or more units as defined in the local building code.

3.3.15 Valve.

3.3.15.1 ***Check Valve.*** A valve that allows flow in one direction only.

3.3.15.2* ***Control Valve.*** An indicating valve employed to control (shut) a supply of water to a sprinkler system.

3.3.16 Waterflow Alarm. A sounding device activated by a waterflow detector or alarm check valve.

3.3.17 Waterflow Detector. An electric signaling indicator or alarm check valve actuated by water flow in one direction only.

Chapter 4 General Requirements

4.1 Sprinkler Temperature Ratings.

4.1.1 Sprinklers having a temperature rating of 135°F to 170°F (57°C to 77°C) shall be classified as ordinary temperature–rated sprinklers.

4.1.2 Sprinklers having a temperature rating of 175°F to 225°F (79°C to 107°C) shall be classified as intermediate temperature–rated sprinklers.

4.1.3 Sprinklers having a temperature rating of 250°F to 300°F (121°C to 149°C) shall be classified as high temperature–rated sprinklers.

4.2 Tube. Wherever the word *pipe* is used in this standard, it shall also mean *tube*.

4.3 Listed or Labeled. Listed or labeled devices and materials shall be installed and used in accordance with the listing limitations and the manufacturers' instructions unless permitted by other sections of this document.

4.4* Documentation. Documentation shall be provided upon request to demonstrate that the water supply, listed devices, and sprinkler coverage comply with the requirements of this standard.

4.5 Qualifications. The layout, calculation, and installation of sprinkler systems installed in accordance with this standard shall only be performed by people knowledgeable and trained in such systems.

Chapter 5 System Components

5.1 General.

5.1.1* Only new sprinklers shall be installed in sprinkler systems.

5.1.1.1* Where a sprinkler is removed from a fitting or welded outlet, it shall not be reinstalled except as permitted by 5.1.1.1.1.

5.1.1.1.1 Dry sprinklers shall be permitted to be reinstalled when removed in accordance with the manufacturer's installation and maintenance instructions.

5.1.1.2 Spare sprinklers shall not be required to be provided.

5.1.2 Except as permitted by 5.1.2.1, devices and materials used in sprinkler systems shall be listed.

5.1.2.1 The following devices and components shall not be required to be listed:

(1) Water supply pipe and fittings
(2) Tanks
(3) Expansion tanks
(4) Connections up to 5 ft (1.5 m) long between a tank and a pump
(5) Pumps
(6) Valves
(7) Gauges
(8) Waterflow detection and notification devices
(9) Hangers
(10) Backflow prevention devices approved by the water authority
(11) Water meters

5.2 Aboveground Pipe and Equipment.

5.2.1 Listed residential sprinklers installed in systems complying with 5.2.2.3, 5.2.2.4, 5.2.5.3, or 5.2.5.4 shall be permitted to have a minimum pressure rating of 130 psi (9 bar).

5.2.2* Pipe or tube used in sprinkler systems shall be of the materials specified in Table 5.2.2 or shall be in accordance with 5.2.3.

5.2.2.1 The chemical properties, physical properties, and dimensions of pipe materials shall be at least equivalent to the standards cited in Table 5.2.2.

5.2.2.2* Pipe used in sprinkler systems other than those addressed in 5.2.2.3 or 5.2.2.4 shall be designed to withstand a working pressure of not less than 175 psi (12.2 bar).

5.2.2.3 Nonmetallic pipe used in multipurpose piping systems and passive purge systems not equipped with a fire department connection shall be designed to withstand a working pressure of not less than 130 psi (9 bar) at 120°F (49°C).

5.2.2.4 Nonmetallic pipe used in wet pipe sprinkler systems not equipped with a fire department connection and provided with a pressure-reducing valve set no higher than 80 psi (5.5 bar) shall be designed to withstand a working pressure of not less than 130 psi (9 bar) at 120°F (49°C) and 100 psi (6.9 bar) at 180°F (82°C).

5.2.2.4.1 If the maximum static pressure from the water supply is less than or equal to 80 psi (5.5 bar), pipe designed to withstand a working pressure of not less than 130 psi (9 bar) at 120°F (49°C) and 100 psi (6.9 bar) at 180°F (82°C) shall be permitted to be used without a pressure-reducing valve.

5.2.2.4.2 If a pressure-reducing valve is used to comply with 5.2.2.4, an automatic means of pressure relief shall be installed on the sprinkler system side of the pressure-reducing valve.

5.2.3 Types of pipe other than those specified in Table 5.2.2 shall be permitted to be used where listed for sprinkler system use.

5.2.3.1 Pipe differing from those specified in Table 5.2.2 shall be installed in accordance with their listings and the manufacturers' installation instructions.

5.2.3.2* Chlorinated polyvinyl chloride (CPVC) pipe and crosslinked polyethylene (PEX) pipe shall comply with the portions of the American Society for Testing and Materials (ASTM) standards specified in Table 5.2.3.2 that apply to fire protection service.

5.2.3.3 Where pipe other than steel is run horizontally or vertically through wood or metal studs, the following provisions shall apply:

(1) Steel shield plates shall be provided where the face of the piping is less than 1.25 in. (32 mm) from the nearest edge of the member.
(2) Steel shield plates shall have a minimum thickness of 0.0575 in. (1.463 mm) (No. 16 gauge).
(3) Steel shield plates shall cover the area of the pipe where the member is notched or bored.

5.2.4 Schedule 10 steel pipe shall be permitted to be joined with mechanical groove couplings approved for service.

5.2.4.1 Where mechanical groove couplings are used to join pipe, grooves shall be rolled on the pipe by an approved groove-rolling machine.

5.2.5 Fittings used in sprinkler systems shall be of the materials listed in Table 5.2.5 or shall be in accordance with 5.2.9.

5.2.5.1 The chemical properties, physical properties, and dimensions of fitting materials shall be at least equivalent to the standards cited in Table 5.2.5.

Table 5.2.2 Pipe or Tube Materials and Dimensions

Materials and Dimensions	Standard
Black and hot-dipped zinc-coated (galvanized) welded and seamless steel pipe for fire protection use	ASTM A795/ A795M
Pipe, steel, black and hot-dipped, zinc-coated, welded and seamless	ASTM A53/ A53M
Welded and seamless wrought steel pipe	ASME B36.10M
Electric-resistance-welded steel pipe	ASTM A135/ A135M
Seamless copper tube [copper tube (drawn, seamless)]	ASTM B75/ B75M
Seamless copper water tube	ASTM B88
Wrought seamless copper and copper-alloy tube	ASTM B251/ B251M
Liquid and paste fluxes for soldering applications of copper and copper-alloy tube	ASTM B813
Filler metals for brazing and braze welding (BCuP, copper-phosphorus, or copper-phosphorus-silver brazing filler metal)	AWS A5.8M/ A5.8
Solder metal [alloy grades containing less than 0.2 percent lead as identified in Section 1 of Table 5 of ASTM B32 and having a solidus temperature that exceeds 400°F (204°C)]	ASTM B32
Seamless red brass pipe	ASTM B43

Table 5.2.3.2 Specifically Listed Pipe or Tube Materials and Dimensions

Materials and Dimensions	Standard
Nonmetallic Piping:	
Chlorinated poly(vinyl chloride) (CPVC) plastic pipe (SDR–PR)	ASTM F442/ F442M
Crosslinked polyethylene (PEX) tubing	ASTM F876

5.2.5.2 Fittings used in sprinkler systems other than those addressed in 5.2.5.3 or 5.2.5.4 shall be designed to withstand a working pressure of not less than 175 psi (12.1 bar).

5.2.5.3 Nonmetallic fittings used in multipurpose piping systems and passive purge systems not equipped with a fire department connection shall be designed to withstand a working pressure of not less than 130 psi (9 bar) at 120°F (49°C).

5.2.5.4 Nonmetallic fittings used in wet pipe sprinkler systems not equipped with a fire department connection and provided with a pressure-reducing valve set no higher than 80 psi (5.5 bar) shall be designed to withstand a working pressure of not less than 130 psi (9 bar) at 120°F (49°C) and 100 psi (6.9 bar) at 180°F (82°C).

5.2.5.4.1 If the maximum static pressure from the water supply is less than or equal to 80 psi (5.5 bar), fittings designed to withstand a working pressure of not less than 130 psi (9 bar) at 120°F (49°C) and 100 psi (6.9 bar) at 180°F (82.2°C) shall be permitted to be used without a pressure-reducing valve.

5.2.5.4.2 If a pressure-reducing valve is used to comply with 5.2.5.4, an automatic means of pressure relief shall be installed on the sprinkler system side of the pressure-reducing valve.

5.2.6 Joints for the connection of copper tube shall be brazed on dry pipe and preaction systems.

5.2.7 Joints for the connection of copper tube for wet pipe systems and antifreeze systems shall be solder joints or be brazed.

5.2.8 Solder joints, where permitted, shall be fabricated in accordance with the methods and procedures listed in ASTM B828, *Standard Practice for Making Capillary Joints by Soldering of Copper and Copper Alloy Tube and Fittings.*

5.2.9 Types of fittings other than those specified in Table 5.2.5 shall be permitted to be used where listed for sprinkler system use.

Table 5.2.5 Fitting Materials and Dimensions

Materials and Dimensions	Standard
Cast Iron:	
Gray iron threaded fittings, Classes 125 and 250	ASME B16.4
Gray iron pipe flanges and flanged fittings, Classes 25, 125, and 250	ASME B16.1
Malleable Iron:	
Malleable iron threaded fittings, Classes 150 and 300	ASME B16.3
Steel:	
Factory-made wrought buttwelding fittings	ASME B16.9
Buttwelding ends	ASME B16.25
Piping fittings of wrought carbon steel and alloy steel for moderate and high temperature service	ASTM A234/ A234M
Pipe flanges and flanged fittings, NPS 1/2 through NPS 24 metric/inch standard	ASME B16.5
Forged fittings, socket-welding and threaded	ASME B16.11
Copper:	
Wrought copper and copper alloy solder joint pressure fittings	ASME B16.22
Cast copper alloy solder joint pressure fittings	ASME B16.18
Cast copper alloy threaded fittings: Classes 125 and 250	ASME B16.15

5.2.9.1 Fittings differing from those specified in Table 5.2.5 shall be installed in accordance with their listings and the manufacturers' installation instructions.

5.2.9.2* CPVC fittings shall comply with the portions of the ASTM standards specified in Table 5.2.9.2 that apply to fire protection service.

Table 5.2.9.2 Specifically Listed Fittings Materials and Dimensions

Materials and Dimensions	Standard
Threaded chlorinated poly(vinyl chloride) (CVPC) plastic pipe fittings, Schedule 80	ASTM F437
Socket-type chlorinated poly(vinyl chloride) (CPVC) plastic pipe fittings, Schedule 40	ASTM F438
Socket-type chlorinated poly(vinyl chloride) (CPVC) plastic pipe fittings, Schedule 80	ASTM F439

5.2.10 Other joining methods investigated for suitability in automatic sprinkler installations and listed for this service shall be permitted.

5.3* Water Supply Pipe and Fittings. Any type of pipe or tube acceptable under the applicable plumbing code for aboveground or underground supply pipe shall be acceptable as a supply for these portions of a fire sprinkler system when installed as follows and in accordance with manufacturer's recommendations:

(1) Between the point of connection and the water supply source
(2) Between a remote system riser and the dwelling or home

5.4 Pre-Engineered Systems. Where listed pre-engineered systems are installed, they shall be installed within the limitations that have been established by the testing laboratories.

Chapter 6 Water Supply

6.1 General Provisions.

6.1.1 Every automatic sprinkler system shall have at least one automatic water supply.

6.1.2 Where stored water is used as the sole source of supply, the minimum quantity shall equal the water demand rate times 10 minutes unless permitted otherwise by 6.1.3.

6.1.3 Where stored water is used as the sole source of supply, the minimum quantity shall be permitted to equal the highest calculated water demand rate times 7 minutes where dwelling units meet the following criteria:

(1) One story in height
(2) Less than 2000 ft^2 (185 m^2) in area

6.1.4 The stored water requirement of 6.1.2 or 6.1.3 shall be permitted to be a combination of the water in the well, including the refill rate, plus the water in the holding tank if such tank can supply the sprinkler system.

6.1.5 The stored water supply requirement of 6.1.2 or 6.1.3 shall be permitted to be a combination of the water in the storage tank and the refill rate when the refilling method is automatic.

6.1.6 The automatic means requirement of 6.1.5 shall be permitted to be a float valve or similar device.

6.2* Water Supply Sources. The following water supply sources shall be considered to be acceptable by this standard:

(1) A connection to a reliable waterworks system with or without an automatically operated pump
(2) An elevated tank
(3) A pressure tank designed to American Society of Mechanical Engineers (ASME) standards for a pressure vessel with a reliable pressure source
(4) A stored water source with an automatically operated pump
(5) A well with a pump of sufficient capacity and pressure to meet the sprinkler system demand

6.2.1 Where a pump is the source of pressure for the water supply for a fire sprinkler system but is not a portion of the domestic water system, the following shall be met:

(1) A test connection shall be provided downstream of the pump that creates a flow of water equal to the smallest sprinkler K-factor on the system.
(2) Pump motors using ac power shall be rated for 240 V and wired in accordance with the NEC (*NFPA 70*).
(3) Any disconnecting means for the pump shall be approved.
(4) The pump shall be located not less than 1½ in. off the floor.

6.2.2 Where a pump and tank is the source of supply for a fire sprinkler system but is not a portion of the domestic water system, the requirements of 6.2.1 and the following shall be met:

(1) The test connection shall return water to the tank.
(2) A method for refilling the tank shall be piped to the tank.
(3) A method of determining the water level in the tank shall be provided without having to open the tank.

6.2.3* Where more than one dwelling unit is served by the same water supply pipe, each dwelling unit shall have an individual control valve that serves the fire sprinkler system in that dwelling unit and the owner shall have access to the valve that controls the sprinkler system in their unit.

6.2.3.1 The control valve shall be permitted to serve the domestic water supply.

6.2.3.2 In the situation addressed by 6.2.3, no valve controlling the sprinkler system in a unit shall be located in another unit.

6.2.3.3* Where a well pump is the source of supply for both the fire sprinkler system and the domestic water system 6.1.4 and Section 6.5 shall apply.

6.3* Multipurpose Piping System.

6.3.1 A multipurpose piping system shall be installed in accordance with 6.3.2 through 6.3.4.

6.3.2 Multipurpose piping systems shall be approved by the local plumbing or health authority.

6.3.3 All piping in the system supplying sprinklers shall be listed and conform to the piping specifications of this standard.

6.3.3.1 Piping connected to the system that supplies only plumbing fixtures shall comply with local plumbing and health authority requirements but is not required to be listed.

6.3.4 A warning sign, with minimum ¼ in. (6 mm) letters, shall be affixed adjacent to the main shutoff valve and shall state the following:

WARNING: The water system for this home supplies fire sprinklers that require certain flows and pressures to fight a fire. Devices that restrict the flow or decrease the pressure or automatically shut off the water to the fire sprinkler system, such as water softeners, filtration systems, and automatic shutoff valves, shall not be added to this system without a review of the fire sprinkler system by a fire protection specialist. Do not remove this sign.

6.4 Manufactured Home Water Supply. For sprinklered buildings manufactured off site, the minimum flow and pressure needed to satisfy the system design criteria on the system side of the meter shall be specified on a data plate by the manufacturer.

6.5 Common Supply Pipes.

6.5.1 Where common supply pipes serve both fire sprinkler and domestic use, they shall comply with 6.5.2 and 6.5.3.

6.5.2 In common water supply connections serving more than one dwelling unit, 5 gpm (20 L/min) shall be added to the sprinkler system demand to determine the size of common piping and the size of the total water supply requirements where no provision is made to prevent flow into the domestic water system upon operation of a sprinkler.

6.5.3 Where water treatment and filtration are installed, one of the following conditions shall be met:

(1) The flow restriction and pressure loss through the water treatment equipment shall be taken into account in the hydraulic calculations.
(2) An automatic bypass shall be installed around the water treatment equipment that directs all water directly to the system.

Chapter 7 Installation

7.1 Valves.

7.1.1 A single control valve arranged to shut off both the domestic system and the sprinkler system shall be installed unless a separate shutoff valve for the sprinkler system is installed in accordance with 7.1.2.

7.1.2 The sprinkler system piping shall not have separate control valves installed unless supervised by one of the following methods:

(1) Central station, proprietary, or remote station alarm service
(2) Local alarm service that causes the sounding of an audible signal at a constantly attended location
(3) Valves that are locked open

7.1.3 A separate shutoff valve shall be installed for the domestic water supply in installations other than those complying with Section 6.3.

7.1.4 If provided, a backflow prevention assembly that includes a shutoff valve shall be considered a control valve, and an additional control valve shall not be required.

7.2 Drains and Test Connections.

7.2.1* Each sprinkler system shall have a minimum ½ in. (15 mm) drain on the system side of the control valve.

7.2.2 A valve shall be installed in the drain piping.

7.2.3 A drain shall be installed for each trapped portion of a dry system that is subject to freezing temperatures.

7.2.4* Where waterflow alarms are provided, test connections shall be installed at locations that allow flow testing of water supplies, connections, and alarm mechanisms.

7.2.5 The test connections, where provided, shall contain a K-factor equal to or smaller than the smallest sprinkler K-factor installed in the system.

7.2.6* Where a pressure-reducing or pressure-regulating valve is installed on a stand-alone system, a test connection with a K-factor at least as large as the smallest sprinkler K-factor on the system shall be installed downstream of the device.

7.3 Pressure Gauges.

7.3.1 Where a dry system is installed, a pressure gauge shall be installed to indicate system air pressure.

7.3.2 Where a pressure tank is used for the water supply, a pressure gauge shall be installed to indicate tank pressure.

7.3.3 Where a pressure-reducing or pressure-regulating valve is installed on a stand-alone system, a pressure gauge shall be installed downstream of the device.

7.4 Piping Support.

7.4.1 Listed pipe shall be supported in accordance with any listing limitations.

7.4.2 Pipe that is not listed, and listed pipe with listing limitations that do not include piping support requirements, shall be supported from structural members using support methods comparable to those required by applicable local plumbing codes.

7.4.3 Piping laid on open joists or rafters shall be supported in a manner that prevents lateral movement.

7.4.4* Sprinkler piping shall be supported in a manner that prevents the movement of piping upon sprinkler operation.

7.4.5* Where sprinkler piping is exposed to the sprinkler protected area, it shall be supported with metal hangers or hangers made of the same material as the structure.

7.5 Sprinklers.

7.5.1 Listed residential sprinklers shall be used unless another type is permitted by 7.5.3, 7.5.4, or 7.5.5. *(See A.10.2.)*

7.5.2 Residential sprinklers shall not be used on systems other than wet pipe systems unless specifically listed for use on that particular type of system.

7.5.3 Listed residential or quick-response standard spray dry pendent or dry sidewall sprinklers shall be permitted to be extended into unheated areas not intended for living purposes.

7.5.4 Quick-response sprinklers shall be permitted to be used in mechanical closets.

7.5.5* Quick-response spray sprinklers shall be permitted to be used in saunas and steam rooms in accordance with 7.5.6.3(4).

7.5.6 Temperature Ratings.

7.5.6.1 Sprinklers installed where maximum ambient ceiling temperatures do not exceed 100°F (38°C) shall be ordinary temperature–rated or intermediate–temperature rated sprinklers throughout unless modified by the requirements of 7.5.6.3.

7.5.6.2 Sprinklers installed where maximum ambient ceiling temperatures are between 101°F and 150°F (38°C and 65°C) shall be intermediate temperature–rated sprinklers unless modified by 7.5.6.3.

7.5.6.3* The following practices shall be observed when installing residential sprinklers unless higher expected ambient temperatures require a higher temperature rating:

(1) Sprinklers under glass or plastic skylights exposed to direct rays of the sun shall be of intermediate temperature classification.
(2) Sprinklers in an unventilated concealed space under an uninsulated roof or in an unventilated attic shall be of intermediate temperature classification.
(3)* Sprinklers installed near specific heat sources that are identified in Table 7.5.6.3 shall be of the temperature rating indicated in Table 7.5.6.3 unless sprinklers are listed for positioning closer to the heat source.
(4) Sprinklers installed in saunas and steam rooms where the maximum ambient ceiling temperatures are between 151°F and 225°F (66°C to 107°C) shall be high temperature–rated spray sprinklers.
(5) Sprinklers in closets containing ventless clothes dryers shall be of the intermediate temperature classification or higher.

7.5.7* Painting and Ornamental Finishes. Sprinklers shall not be painted or enameled unless applied by the manufacturer and the sprinkler has been listed with such finishes.

7.5.8 Escutcheon Plates. Where nonmetallic sprinkler ceiling plates (escutcheons) or recessed escutcheons (metallic or nonmetallic) are used, they shall be listed based on testing of the assembly as a residential sprinkler.

7.5.9 Solvent Cement. Where solvent cement is used as the pipe and fittings bonding agent, sprinklers shall not be installed in the fittings prior to the fittings being cemented in place.

7.6* Alarms. Local waterflow alarms shall be provided on all sprinkler systems in homes not equipped with smoke alarms or smoke detectors in accordance with *NFPA 72*.

7.7 Attics. When nonmetallic piping is installed in attics, adequate insulation shall be provided on the attic side of the piping to avoid exposure of the piping to temperatures in excess of the pipe's rated temperature.

7.8 Multipurpose and Passive Purge Systems.

7.8.1 Where common supply pipes serve both fire sprinkler and domestic uses, a point of connection shall be provided for the domestic connection.

Table 7.5.6.3 Minimum Distances for Ordinary and Intermediate Temperature Residential Sprinklers

Heat Source	From Edge of Source to Ordinary Temperature Sprinkler		From Edge of Source to Intermediate Temperature Sprinkler	
	in.	mm	in.	mm
Side of open or recessed fireplace	36	900	12	300
Front of recessed fireplace	60	1500	36	900
Coal- or wood-burning stove	42	1050	12	300
Kitchen range	18	450	9	225
Wall oven	18	450	9	225
Hot air flues	18	450	9	225
Uninsulated heat ducts	18	450	9	225
Uninsulated hot water pipes	12	300	6	150
Side of ceiling- or wall-mounted hot air diffusers	24	600	12	300
Front of wall-mounted hot air diffusers	36	900	18	450
Hot water heater or furnace	6	150	3	75
Light fixture				
0 W–250 W	6	150	3	75
250 W–499 W	12	300	6	150

7.8.2 Where the fire sprinkler system and the domestic system are separate, the point of connection shall be permitted to be at any location complying with Sections 6.2, 6.3, or 6.5.

7.8.3 For passive purge systems, the fire sprinkler system installer shall provide a minimum ½ in. (13 mm) NPT capped or plugged connection at the compartment where the passive purge fixture will be installed.

7.8.4 Other means and locations of connections shall be permitted when coordinated with the domestic installer and approved by the authority having jurisdiction.

Chapter 8 Sprinkler Position and Location

8.1 Design Criteria.

8.1.1 Sloped Ceilings.

8.1.1.1 Where the ceiling is sloped, the maximum *S* dimension shall be measured along the slope of the ceiling to the next sprinkler or wall, as shown in Figure 8.1.1.1.

8.1.1.2 The sprinklers shall maintain the minimum listed spacing, but no less than 8 ft (2.4 m), measured in the plan view from one sprinkler to another, as shown in Figure 8.1.1.1.

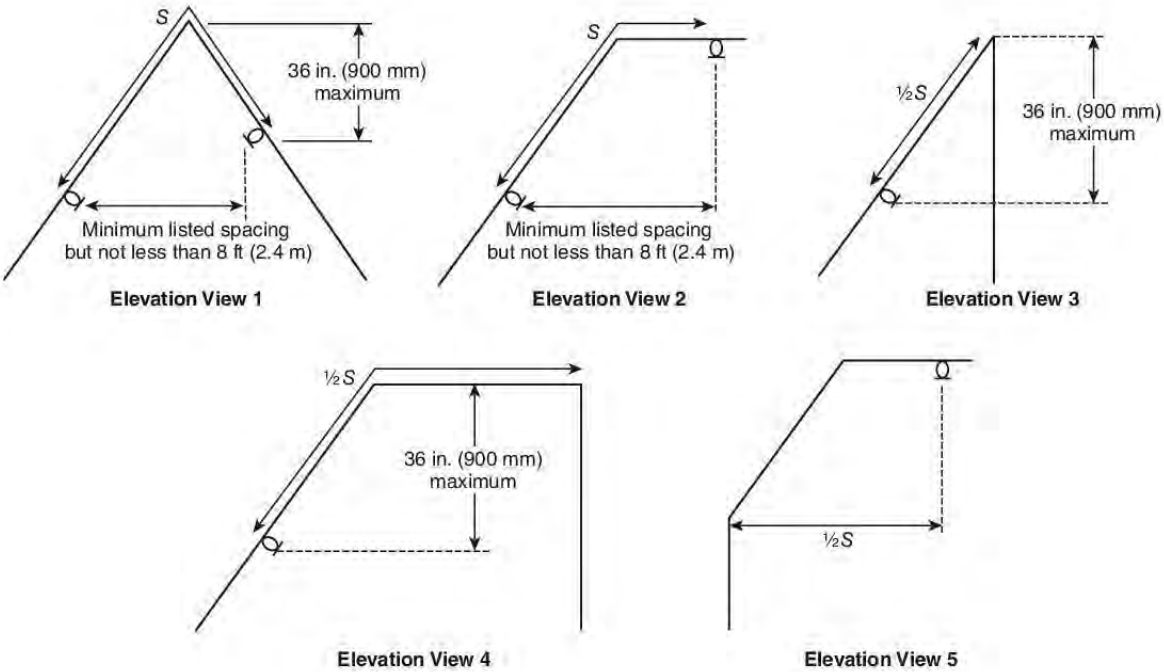

FIGURE 8.1.1.1 Measuring *S* Dimension.

8.1.1.3 Where the ceiling is sloped, a sprinkler shall be installed within 36 in. (900 mm) vertically of the peak as shown in Figure 8.1.1.1 or in accordance with the manufacturer's listing.

8.1.2 Nonresidential Sprinklers. Sprinklers other than residential sprinklers shall be installed in accordance with the coverage criteria specified by NFPA 13.

8.1.3 Sprinkler Coverage.

8.1.3.1 Residential Sprinklers.

8.1.3.1.1 Sprinklers shall be installed in accordance with their listing where the type of ceiling configuration is referenced in the listing.

8.1.3.1.2* Where construction features or other special conditions exist that are outside the scope of sprinkler listings, listed sprinklers shall be permitted to be installed beyond their listing limitations.

8.1.3.1.3 Where a physical barrier exists between the sprinklers that prevents each sprinkler from directly spraying on the other, there shall be no minimum distance between sprinklers.

8.1.4 Operating Pressure. The minimum operating pressure of any sprinkler shall be the higher of the minimum operating pressure specified by the listing or 7 psi (0.5 bar).

8.2 Position of Sprinklers.

8.2.1 Residential Pendent and Upright Sprinklers.

8.2.1.1 Pendent and upright sprinklers that have not been listed with specific deflector to ceiling distances shall be positioned so that the deflectors are within 1 in. to 4 in. (25 mm to 100 mm) from the ceiling unless otherwise permitted by 8.2.7 or 8.2.1.2.

8.2.1.2* Pendent-type residential sprinklers located under or adjacent to beams in accordance with 10.2.1 shall be installed in accordance with one of the following:

(1) Pendent, recessed pendent, concealed, and flush-type pendent sprinklers shall be permitted to be installed directly under a beam having a maximum depth of 14 in. (350 mm) with the sprinkler deflector 1 in. to 2 in. (25 mm to 50 mm) below the beam, or in accordance with the manufacturer's instructions for recessed or flush sprinklers if the deflector is less than 1 in. (25 mm) below the beam, as shown in Figure 8.2.1.2(a).

(2) Pendent sprinklers shall be permitted to be installed adjacent to beams where the vertical centerline of the sprinkler is no greater than 2 in. (50 mm) from the edge of the beam and with the sprinkler deflector 1 in. to 2 in. (25 mm to 50 mm) below the beam, or in accordance with the manufacturer's instructions for flush sprinklers if the deflector is less than 1 in. (25 mm) below the beam, as shown in Figure 8.2.1.2(b).

8.2.1.3 Pendent and upright sprinklers that have been listed with specific positioning criteria shall be positioned in accordance with their listing unless permitted otherwise by 8.2.7.

8.2.2 Residential Sidewall Sprinklers.

8.2.2.1 Sidewall sprinklers that have not been listed with specific positioning criteria shall be positioned so that the deflectors are within 4 in. to 6 in. (100 mm to 150 mm) from the ceiling.

8.2.2.2 Sidewall sprinklers that have been listed with specific positioning criteria shall be installed in accordance with their listing.

8.2.2.3 Residential horizontal sidewall sprinkler deflectors shall be located no more than 6 in. (150 mm) from the face of the wall or soffit on which they are mounted.

8.2.3 Nonresidential Sprinklers. Sprinklers other than residential sprinklers shall be positioned in accordance with the positioning criteria specified by NFPA 13.

8.2.4 Basements Without Ceilings. In basements where ceilings are not required for the protection of piping or where metallic pipe is installed, residential sprinklers shall be permitted to be positioned in a manner that anticipates future installation of a finished ceiling.

8.2.5* Obstructions to Residential Sprinklers.

8.2.5.1 Pendent Sprinklers.

8.2.5.1.1 Pendent sprinklers shall be located at least 36 in. (900 mm) away from obstructions such as ceiling fans and light fixtures unless the requirements of 8.2.5.3 are met.

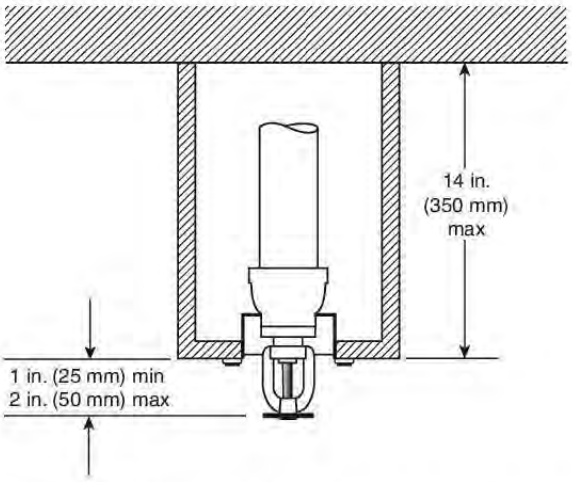

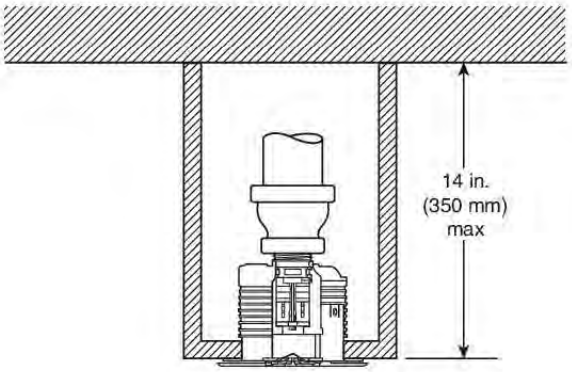

FIGURE 8.2.1.2(a) Position of Sprinkler Under a Beam.

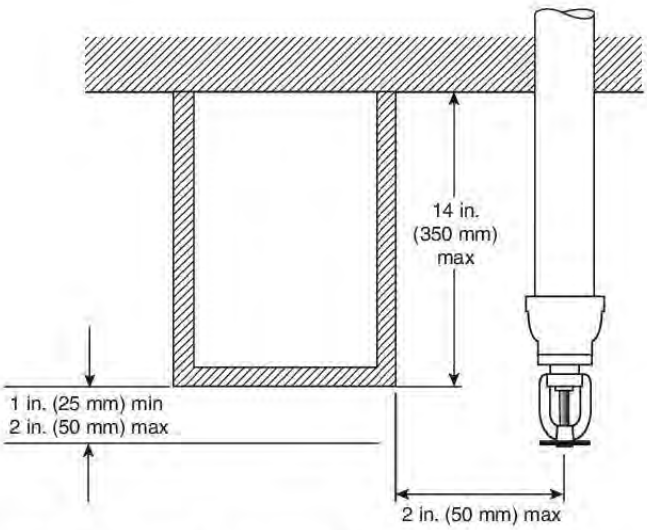

FIGURE 8.2.1.2(b) Position of Sprinkler Adjacent to a Beam.

8.2.5.1.2 The distance shall be measured from the center of the sprinkler to the center of the obstruction.

8.2.5.1.3 Where the sprinkler cannot be located 36 in. (900 mm) away from the obstruction (as measured from the center of the obstruction), an additional sprinkler shall be located on the other side of the obstruction.

8.2.5.1.4 Where the area of the fan blades encompass more than 50 percent of the area of the plan view, the sprinkler shall be installed in accordance with 8.2.5.3.

8.2.5.1.5 In hallways up to 6 ft (1.8 m) in width, sprinklers shall be permitted to be located adjacent to obstructions where the sprinkler is installed in the allowable obstruction zone as shown in Figure 8.2.5.1.5 and the closest edge of the obstruction is a minimum of 12 in. (300 mm) away from the centerline of the sprinkler.

8.2.5.2 Sidewall Sprinklers.

8.2.5.2.1 Sidewall sprinklers shall be located at least 5 ft (1.5 m) away from obstructions such as ceiling fans and light fixtures unless the requirements of 8.2.5.4 are met.

8.2.5.2.2 The distance shall be measured from the center of the sprinkler to the center of the obstruction.

8.2.5.2.3 Where the sprinkler cannot be located 5 ft (1.5 m) away from the obstruction (as measured to the center of the obstruction), an additional sprinkler shall be installed on the other side of the obstruction.

8.2.5.2.4 Where the area of the fan blades encompasses more than 50 percent of the area of the plan view, the sprinkler shall be installed in accordance with 8.2.5.4.

8.2.5.2.5 In hallways up to 6 ft (1.8 m) in width, sprinklers shall be permitted to be located adjacent to obstructions where the sprinkler is installed in the allowable obstruction zone as shown in Figure 8.2.5.2.5 and the closest edge of the obstruction is a minimum of 12 in. (300 mm) away from the deflector.

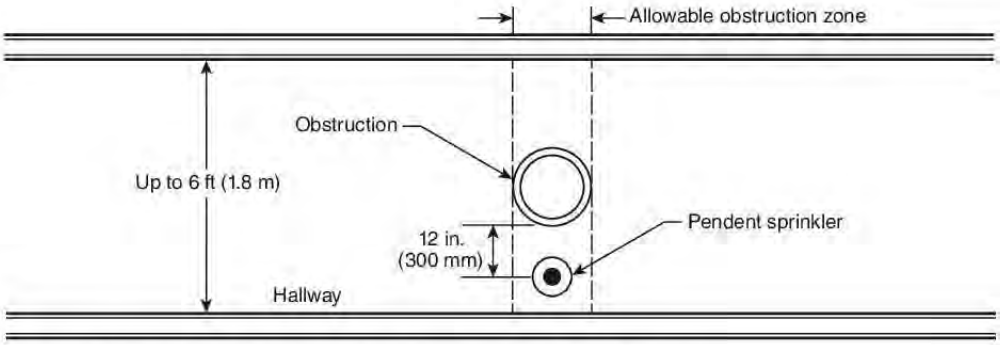

FIGURE 8.2.5.1.5 Obstruction in Hallway — Pendent Sprinkler

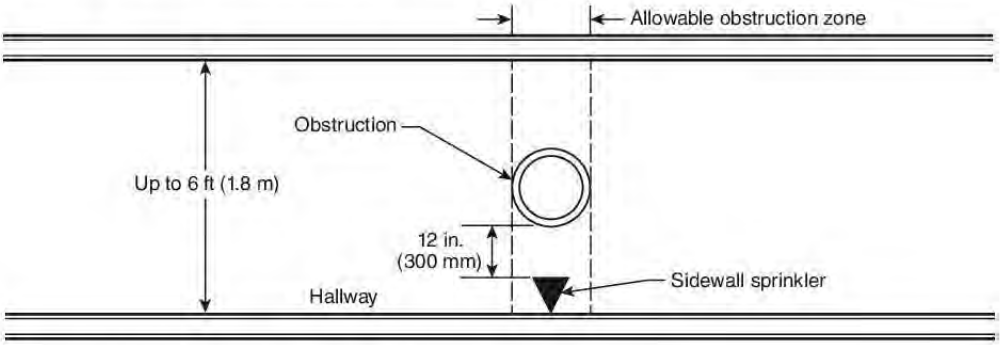

FIGURE 8.2.5.2.5 Obstruction in Hallway — Sidewall Sprinkler

8.2.5.3 Continuous Obstructions to Pendent Sprinklers.

8.2.5.3.1 Sprinklers shall be positioned with respect to continuous obstructions in accordance with 8.2.5.3.2, 8.2.5.3.3, or 8.2.5.3.4.

8.2.5.3.2 Sprinklers shall be positioned with respect to continuous obstructions in accordance with Table 8.2.5.3.2 and Figure 8.2.5.3.2.

8.2.5.3.3 Sprinklers shall be positioned with respect to an obstruction against a wall in accordance with Figure 8.2.5.3.3(a), Figure 8.2.5.3.3(b), or Figure 8.2.5.3.3(c).

8.2.5.3.4 A sprinkler shall be installed on the other side of the obstruction.

8.2.5.4 Continuous Obstructions to Sidewall Sprinklers.

8.2.5.4.1 Sprinklers shall be positioned with respect to continuous obstructions in accordance with 8.2.5.4.2 or 8.2.5.4.3.

Table 8.2.5.3.2 Positioning of Sprinklers to Avoid Obstructions to Discharge (Residential Upright and Pendent)

Distance from Sprinklers to Side of Obstruction (*A*)		Allowable Distance of Deflector Above Bottom of Obstruction (*B*)	
ft	mm	in.	mm
Less than 1.5	Less than 450	0	0
1.5 or more	450 or more	1	25
3 or more	900 or more	3	75
4 or more	1200 or more	5	125
4.5 or more	1350 or more	7	175
6 or more	1800 or more	9	225
6.5 or more	1950 or more	11	275
7 or more	2100 or more	14	350
8 or more	2400 or more	15	375
8.5 or more	2600 or more	17	425
9 or more	2700 or more	19	475

Note: For *A* and *B*, refer to Figure 8.2.5.3.2.

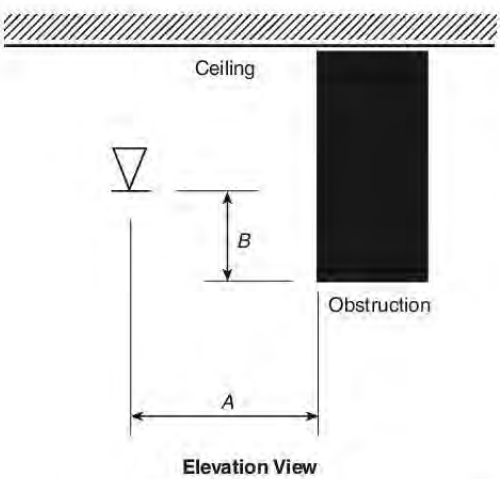

FIGURE 8.2.5.3.2 Positioning of Sprinkler to Avoid Obstruction to Discharge (Residential Upright and Pendent Spray Sprinklers).

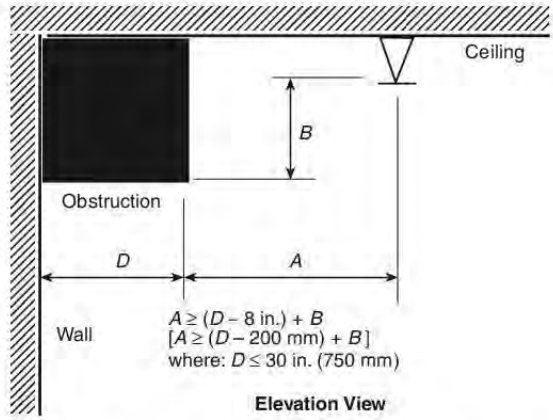

FIGURE 8.2.5.3.3(a) Positioning of Sprinkler to Avoid Obstructions Against Walls — Scenario 1 (Residential Upright and Pendent Spray Sprinklers).

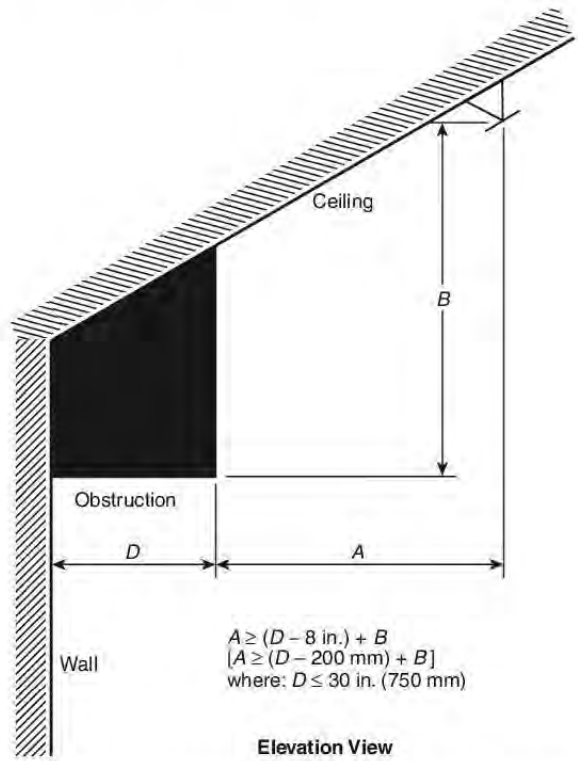

FIGURE 8.2.5.3.3(b) Positioning of Sprinkler to Avoid Obstructions Against Walls — Scenario 2 (Residential Upright and Pendent Spray Sprinklers).

8.2.5.4.2 Sprinklers shall be positioned with respect to continuous obstructions in accordance with Table 8.2.5.4.2(a), Figure 8.2.5.4.2(a), Table 8.2.5.4.2(b), Figure 8.2.5.4.2(b), Figure 8.2.5.4.2(c), and Figure 8.2.5.4.2(d).

8.2.5.4.3 A sprinkler shall be installed on the other side of the obstruction.

8.2.5.5 Soffits and Cabinets. Where soffits are used for the installation of sidewall sprinklers, the sprinklers and soffits shall be installed in accordance with 8.2.5.5.1, 8.2.5.5.2, or 8.2.5.5.3.

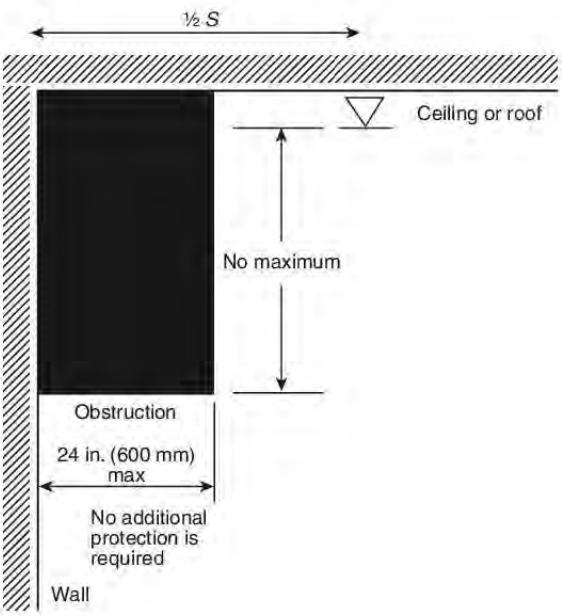

FIGURE 8.2.5.3.3(c) Positioning of Sprinklers to Avoid Obstructions Against Walls — Scenario 3 (Residential Upright and Pendent Spray Sprinklers).

Table 8.2.5.4.2(a) Positioning of Sprinklers to Avoid Obstructions (Residential Sidewall Sprinklers)

Distance from Sidewall Sprinkler to Side of Obstruction (*A*)		Maximum Allowable Distance of Deflector Above Bottom of Obstruction (*B*)	
ft	mm	in.	mm
Less than 8	Less than 2400	0	0
8 or more	2400 or more	1	25
10 or more	3000 or more	2	50
11 or more	3300 or more	3	75
12 or more	3600 or more	4	100
13 or more	3900 or more	6	150
14 or more	4200 or more	7	175
15 or more	4500 or more	9	225
16 or more	4800 or more	11	275
17 or more	5100 or more	14	350

Note: For *A* and *B*, refer to Figure 8.2.5.4.2(a).

Table 8.2.5.4.2(b) Positioning of Sprinklers to Avoid Obstructions Along Wall (Residential Sidewall Sprinklers)

Distance from Sidewall Sprinkler to Side of Obstruction (*A*)		Maximum Allowable Distance of Deflector Above Bottom of Obstruction (*B*)	
ft	mm	in.	mm
Less than 1.5	Less than 450	0	0
1.5 or more	450 or more	1	25
3 or more	900 or more	3	75
4 or more	1200 or more	5	125
4.5 or more	1400 or more	7	175
6 or more	1800 or more	9	225
6.5 or more	2000 or more	11	275
7 to less than 7.5	2200 to less than 2300	14	350

Note: For *A* and *B*, refer to Figure 8.2.5.4.2(b).

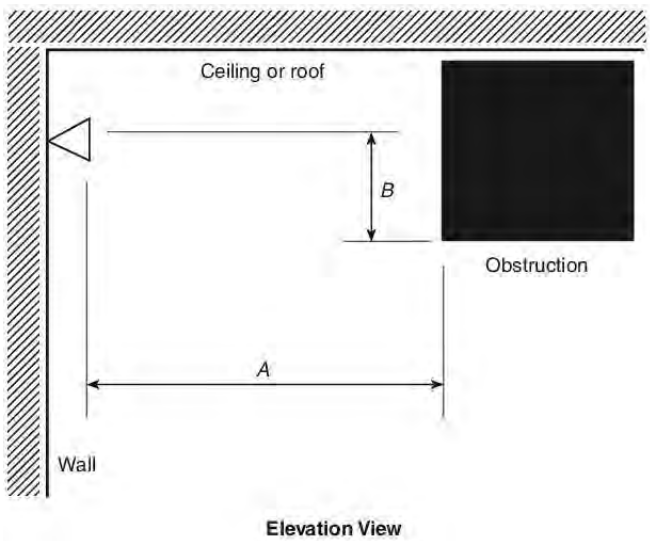

FIGURE 8.2.5.4.2(a) Positioning of Sprinkler to Avoid Obstruction (Residential Sidewall Sprinklers).

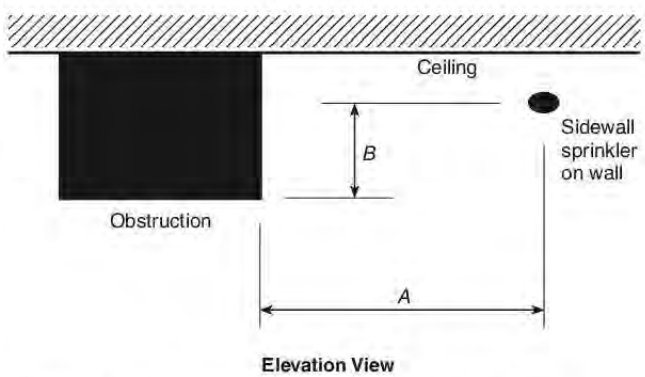

FIGURE 8.2.5.4.2(b) Positioning of Sprinkler to Avoid Obstruction Along Wall (Residential Sidewall Sprinklers).

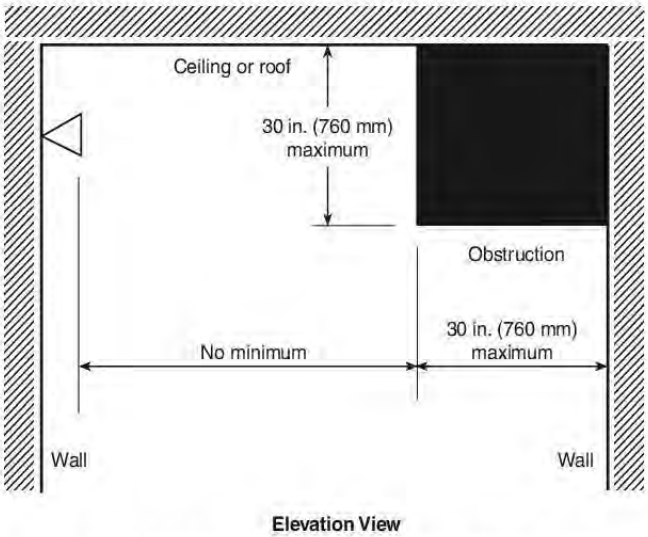

FIGURE 8.2.5.4.2(c) Positioning of Sprinkler to Avoid Obstructions Against Walls — Scenario 1 (Residential Sidewall Sprinklers).

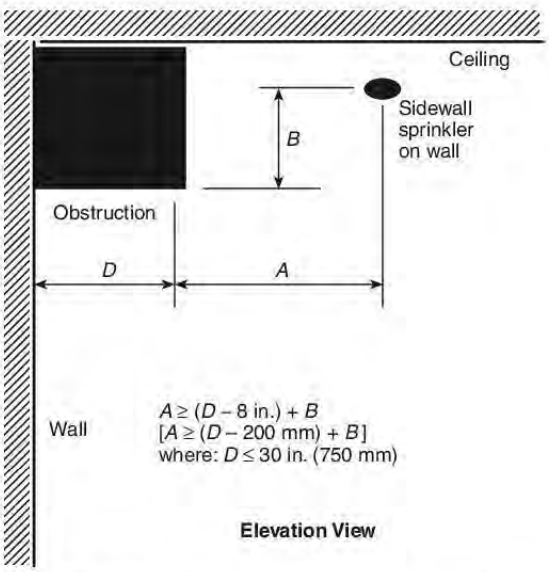

FIGURE 8.2.5.4.2(d) Positioning of Sprinkler to Avoid Obstructions Against Walls — Scenario 2 (Residential Sidewall Spray Sprinklers).

8.2.5.5.1 Where soffits exceed more than 8 in. (200 mm) in width or projection from the wall, sprinklers shall be installed under the soffit.

8.2.5.5.2 Sidewall sprinklers shall be permitted to be installed in the face of a soffit located directly over cabinets, without requiring additional sprinklers below the soffit or cabinets, where the soffit does not project horizontally more than 12 in. (300 mm) from the wall.

8.2.5.5.3 Where sidewall sprinklers are more than 3 ft (0.91 m) above the top of cabinets, the sprinkler shall be permitted to be installed on the wall above the cabinets where the cabinets are no greater than 12 in. (300 mm) from the wall.

8.2.5.6 Shadow areas in corridors up to 2 ft (0.61 m) in depth and up to 9 ft (2.7 m) in length behind sidewall sprinklers shall be permitted as shown in Figure 8.2.5.6.

8.2.5.7* Shadow Areas. Shadow areas shall be permitted in the protection area of a sprinkler as long as the cumulative dry areas do not exceed 15 ft^2 (1.4 m^2) per sprinkler.

8.2.5.8 Small areas created by architectural features, such as planter box windows, bay windows, and similar features, shall be evaluated as follows:

(1) Where no additional floor area is created by the architectural feature, no additional sprinkler protection is required.
(2) Where additional floor area is created by an architectural feature, no additional sprinkler protection is required, provided all of the following conditions are met:
  (a) The floor area shall not exceed 18 ft^2 (1.7 m^2).
  (b) The floor area shall not be greater than 24 in. (600 mm) in depth at the deepest point of the architectural feature to the plane of the primary wall where measured along the finished floor.
  (c) The floor shall not be greater than 9 ft (2.7 m) in length where measured along the plane of the primary wall.
  (d) Measurement from the deepest point of the architectural feature to the sprinkler shall not exceed the maximum listed spacing of the sprinkler.
(3) The hydraulic design shall not be required to consider the area created by the architectural feature.

8.2.6* Exposed Barrel Lengths for Dry Sprinklers.

8.2.6.1 Where dry sprinklers are connected to wet pipe sprinkler systems protecting areas subject to freezing temperatures, the minimum exposed length of the barrel of the dry sprinkler shall be in accordance with Table 8.2.6.1(a) or Table 8.2.6.1(b).

8.2.6.2 The minimum barrel length shall be measured from the face of the fitting to which the dry sprinkler is installed to the inside surface of the insulation, wall, or ceiling leading to the cold space, whichever is closer to the fitting.

8.2.7 Closets and Compartments. In all closets and compartments that are smaller than 400 ft^3 (11 m^3), including those housing mechanical equipment, pendent, upright, and sidewall residential sprinklers shall be permitted to be installed in either of the following situations:

(1) Within 18 in. (450 mm) of the ceiling to avoid obstructions near the ceiling where the compartment is enclosed by walls and a door
(2) At the highest ceiling level without regard to obstructions or minimum distances to wall

8.3 Location of Sprinklers.

8.3.1 Sprinklers shall be installed in all areas except where omission is permitted by 8.3.2 through 8.3.7.

8.3.2 Sprinklers shall not be required in bathrooms of 55 ft^2 (5.1 m^2) and less.

8.3.3 Sprinklers shall not be required in clothes closets, linen closets, and pantries that meet all of the following conditions:

(1) The area of the space does not exceed 24 ft^2 (2.2 m^2).
(2) The walls and ceilings are surfaced with noncombustible or limited-combustible materials as defined in NFPA 220.

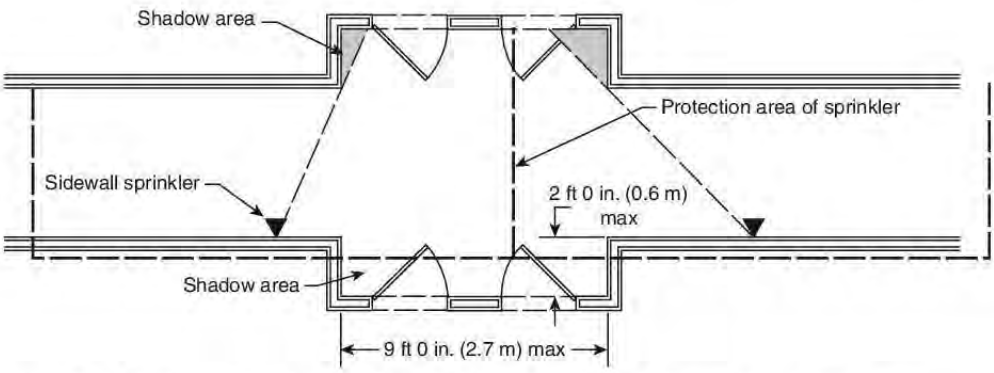

FIGURE 8.2.5.6 Shadow Areas Behind Sidewall Sprinklers in Corridors. [13R:Figure 6.4.6.3.3.2]

8.3.4* Sprinklers shall not be required in garages, open attached porches and balconies, carports, and similar structures.

8.3.5 Sprinklers shall not be required in attics with or without storage, penthouse equipment rooms, elevator machine rooms, concealed spaces dedicated exclusively to and containing only dwelling unit ventilation equipment, floor/ceiling spaces, vertical chases, elevator shafts, crawl spaces, and other concealed spaces that are not used or intended for living purposes.

8.3.5.1 Such spaces that contain fuel-fired equipment shall also comply with 8.3.5.1.1 or 8.3.5.1.2.

8.3.5.1.1 Where fuel-fired equipment is located other than beneath an occupied area of the dwelling unit, sprinkler protection shall not be required based on the presence of the fuel-fired equipment.

8.3.5.1.2* Where fuel-fired equipment is located beneath an occupied area of the dwelling unit, at least one quick-response intermediate temperature sprinkler shall be installed above the equipment.

8.3.6* Sprinklers shall not be required in unheated enclosures at the building at entrances/exits as long as the dwelling unit has another entrance/exit.

8.3.7 Sprinklers shall not be required for ceiling pockets that meet the following conditions:

(1) The total volume of all unprotected ceiling pockets in a compartment does not exceed 100 ft^3 (2.8 m^3).
(2) The entire floor under the unprotected ceiling pocket is protected by sidewall or pendent sprinklers at the lower ceiling elevation.
(3)* The interior finish of the unprotected ceiling pocket excluding decorative treatments is noncombustible or limited-combustible material.
(4) Skylights not exceeding 32 ft^2 (3 m^2) shall be permitted to have a plastic cover.

8.3.8 Sprinklers shall not be required in closets in garages and exterior closets (regardless of size) located on exterior balconies, exterior breezeways/corridors, or accessed from outdoors where the closet does not have doors or unprotected penetrations directly into the dwelling unit.

Table 8.2.6.1(a) Exposed Barrel Lengths for Dry Sprinklers (U.S. Customary Units)

Average Annual Extreme Minimum Temperature Exposed to Discharge End of Sprinkler (°F)	Minimum Exposed Barrel Length when Exposed to 40°F (in.)	Minimum Exposed Barrel Length when Exposed to 50°F (in.)	Minimum Exposed Barrel Length when Exposed to 60°F (in.)
40	0	0	0
30	0	0	0
20	4	0	0
10	8	1	0
0	12	3	0
−10	14	4	1
−20	14	6	3
−30	16	8	4
−40	18	8	4
−50	20	10	6
−60	20	10	6

8.3.9 Sprinklers shall be installed in any closet used for heating and/or air-conditioning equipment, washers and/or dryers, or water heaters except as allowed by 8.3.8.

8.3.10 Tiny House(s).

8.3.10.1 For dwellings 400 ft^2 (37 m^2) or less in floor area, excluding lofts, residential sprinklers shall be installed in accordance with the manufacturer's listed spacing without regard to obstructions.

8.3.10.2 The floor area under structural horizontal obstructions greater than 4 ft (1200 mm) in width shall be protected.

8.3.10.3 Sprinkler positioning in accordance with Section 8.2 shall not be required.

Table 8.2.6.1(b) Exposed Barrel Lengths for Dry Sprinklers (Metric Units)

Average Annual Extreme Minimum Temperature Exposed to Discharge End of Sprinkler (°C)	Minimum Exposed Barrel Length when Exposed to 4°C (mm)	Minimum Exposed Barrel Length when Exposed to 10°C (mm)	Minimum Exposed Barrel Length when Exposed to 16°C (mm)
4	0	0	0
−1	0	0	0
−7	100	0	0
−12	200	25	0
−18	300	75	0
−23	350	100	25
−29	350	150	75
−34	400	200	100
−40	450	200	100
−46	500	250	150
−51	500	250	150

Chapter 9 Protection from Freezing

9.1 System Types. Systems shall be permitted to be wet pipe, dry pipe, or preaction.

9.1.1* Wet Pipe Systems. A wet pipe system shall be permitted to be used where all piping is installed in areas not subject to freezing, including areas properly insulated to maintain 40°F (4°C).

9.1.2 Systems in Areas Subject to Freezing.

9.1.2.1 Where any portion of a system is subject to freezing and the temperature cannot be maintained at or above 40°F (4°C), the pipe shall be protected against freezing by use of one of the following methods:

(1) Dry pipe system and preaction systems in accordance with Section 9.3
(2) Antifreeze system in accordance with Section 9.2
(3) Listed standard dry pendent or dry sidewall sprinklers extended from pipe in heated areas into unheated areas not intended for living purposes
(4)* Listed heat tracing provided that it is installed and insulated in accordance with manufacturer's instructions, specifically heat tracing used on branch lines is listed for branch lines of fire sprinkler systems
(5) Listed residential dry pendent or dry sidewall sprinklers extended from pipe in heated areas into unheated areas

9.1.2.2* The weather temperature used to determine if an unconditioned portion of a system is subject to freezing and required to be protected in accordance with 9.1.2 shall be the average annual extreme minimum temperature obtained from an approved source.

9.2* Antifreeze Systems.

9.2.1* Conformity with Health Regulations. The use of antifreeze solutions shall be in conformity with any state or local health regulations.

9.2.2* Antifreeze Solutions.

9.2.2.1 Except as permitted in 9.2.2.2, antifreeze solutions shall be listed for use in new sprinkler systems.

9.2.2.1.1 For existing systems, antifreeze solutions shall be limited to premixed antifreeze solutions of glycerine (chemically pure or United States Pharmacopoeia 96.5 percent) at a maximum concentration of 50 percent by volume, propylene glycol at a maximum concentration of 40 percent by volume, or other solutions listed specifically for use in fire protection systems.

9.2.2.2* Premixed solutions of glycerine (chemically pure or United States Pharmacopoeia 96.5 percent at a maximum concentration of 48 percent by volume or propylene glycol at a maximum concentration of 38 percent by volume shall be permitted to protect piping that is supplying sprinklers in a specific area of the dwelling unit, where acceptable to the authority having jurisdiction.

9.2.2.2.1* Documentation shall be presented to the AHJ to substantiate the use of the antifreeze solution.

9.2.2.3* The specific gravity of the antifreeze solution shall be checked by a hydrometer with a scale having 0.002 subdivisions.

9.2.3* Arrangement of Supply Piping and Valves.

9.2.3.1 Connections Between Antifreeze System and Wet Pipe System with No Backflow Prevention Device.

9.2.3.1.1 A 5 ft (1.5 m) drop pipe, or U-loop, shall be installed in the connection between the antifreeze system and the wet pipe system as illustrated in Figure 9.2.3.1.1.

9.2.3.1.2 If sprinklers are above the level of the water supply to the antifreeze system, a check valve with a 1/32 in. (0.8 mm) hole in the clapper shall be provided in the U-loop.

9.2.3.1.3 Valves shall be provided as illustrated in Figure 9.2.3.1.1.

9.2.3.1.4 Arrangement of supply piping when the water supply comes from a storage tank or the water supply feeds through a check valve that does not have a 1/32 in. (0.8 mm) hole drilled in the clapper shall meet the requirements of 9.2.3.2.2.

9.2.3.2* Connections Between Antifreeze System and Wet Pipe System with Backflow Prevention Device Installed.

9.2.3.2.1 Valves shall be provided as illustrated in Figure 9.2.3.2.1.

9.2.3.2.2 An expansion chamber shall be provided as illustrated in Figure 9.2.3.2.1.

9.2.3.2.3 The expansion chamber shall be sized based on the minimum and maximum volume of the antifreeze solution over the life of the system.

9.2.4 Hydrostatic Test. Where pendent sprinklers are utilized, and where a hydrostatic test shall be performed, the hydrostatic test shall be performed with water and then the water shall be completely drained before antifreeze solution is placed in the system, or the hydrostatic test shall be performed with antifreeze solution at the proper concentration for the system.

9.2.5 Placard Information. A placard shall be placed on the antifreeze system main valve that indicates the manufacturer

type and brand of antifreeze solution, the concentration of antifreeze solution used, and the volume of the antifreeze solution used in the system.

9.3 Dry Pipe and Preaction Systems.

9.3.1 Sprinklers.

9.3.1.1 Sprinklers shall be specifically listed for use on dry pipe and double interlock preaction systems.

9.3.1.2 The following types of sprinklers and arrangements shall be permitted for dry pipe and preaction systems:

(1) Residential upright sprinklers

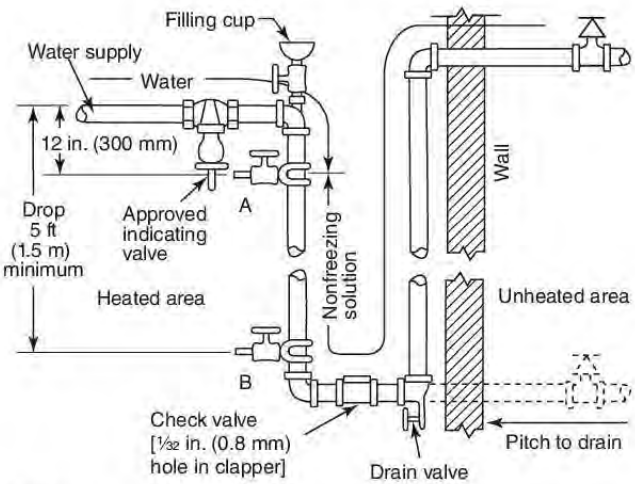

Notes:
1. The check valve can be omitted where sprinklers are below the level of valve A.
2. The 1/32 in. (0.8 mm) hole in the check valve clapper is needed to allow for expansion of the solution during a temperature rise, thus preventing damage to sprinklers.

FIGURE 9.2.3.1.1 Arrangement of Supply Piping and Valves.

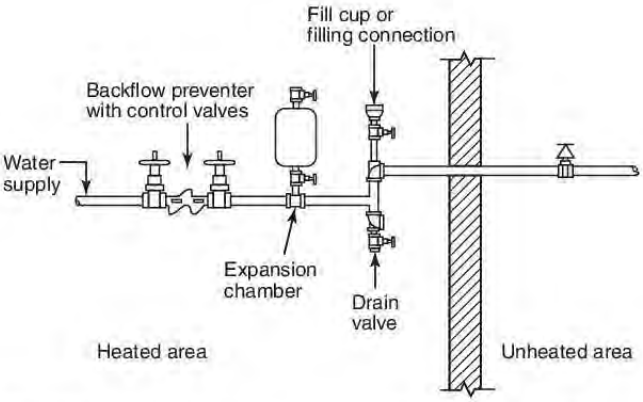

FIGURE 9.2.3.2.1 Arrangement of Supply Piping with Backflow Device.

(2) Residential dry sprinklers
(3) Residential pendent and sidewall sprinklers installed on return bends, where the sprinklers, return bends, and branch line piping are in an area maintained at or above 40°F (4°C)
(4) Residential horizontal sidewall sprinklers, installed so that water is not trapped

9.3.1.3 Return bends required per 9.3.1.2(3) shall be permitted to be omitted when using potable water supplies combined with corrosion-resistant pipe.

9.3.1.4 Sprinklers with nominal K-factors greater than 4.0 and less than 5.6 shall be permitted to be installed on dry pipe systems where piping is corrosion resistant or internally galvanized.

9.3.1.5 Sprinklers with nominal K-factors of 5.6 or greater shall be permitted to be installed on pipe complying with the requirements of Section 5.2.

9.3.2 Preaction Systems. Preaction systems shall be one of the following types:

(1) A single interlock system, which admits water to sprinkler piping upon operation of detection devices
(2) A noninterlock system, which admits water to sprinkler piping upon operation of detection devices or automatic sprinklers
(3) A double interlock system, which admits water to sprinkler piping upon operation of both detection devices and automatic sprinklers

9.3.3 Dry Pipe and Double Interlock Preaction System Water Delivery.

9.3.3.1 Water delivery shall be based on the hazard shown in Table 9.3.3.1.

9.3.3.2 Water delivery shall be based on one of the following:

(1) A calculation program and method that shall be listed by a nationally recognized laboratory
(2) An inspector's test connection providing a flow equivalent to the smallest sprinkler K-factor utilized, wherein the test connection is located on the end of the most remote branchline

9.3.4 Location and Protection of Dry Pipe and Preaction Valves. The dry pipe valve, preaction valve, and supply pipe shall be protected against freezing and physical damage.

9.3.5* Detection Devices.

9.3.5.1 The detection system shall be designed to operate sooner than the first sprinkler.

9.3.5.2 Detectors shall be installed in all areas and compartments where sprinklers are installed.

Table 9.3.3.1 Water Delivery Time for Dry Pipe and Double Interlock Preaction Systems

Hazard	Number of Most Remote Sprinklers Initially Open	Maximum Time of Water Delivery (seconds)
Residential	1	15

9.3.6 System Configuration. Dry pipe systems and preaction systems of the type described in 9.3.2(3) shall not be gridded.

9.3.7 Drainage. Piping shall be pitched a minimum of ¼ in. per 10 ft (6 mm per 3 m) to facilitate draining.

9.3.8 Auxiliary Drains.

9.3.8.1 Auxiliary drains shall be provided where a change in piping direction prevents drainage of system piping through the drain valve on the system side of the control valve.

9.3.8.2 At a minimum, auxiliary drains shall be a nipple and cap or plug not less than ½ in. (13 mm).

9.3.9 Air Supply. The system air pressure shall be maintained by approved equipment.

Chapter 10 Discharge and Hydraulic Calculations

10.1 Design Discharge.

10.1.1* Sprinklers That Are Listed with Specific Discharge Criteria. The system shall provide at least the flow required to produce a minimum discharge density of 0.05 gpm/ft^2 (2.0 mm/min) or the sprinkler listing, whichever is greater, to the design sprinklers.

10.1.2 Water Supply. Where the water supply is a public or private water main 4 in. (100 mm) (nominal) in size or larger, the static pressure shall be permitted to be used for comparison to the sprinkler system demand regardless of the method used to determine the adequacy of the piping.

10.2* Number of Design Sprinklers.

10.2.1 For each of the following situations, the number of sprinklers in the design area shall be all of the sprinklers within a compartment, up to a maximum of two sprinklers, that require the greatest hydraulic demand:

(1) A flat, smooth, horizontal ceiling with no beams up to a maximum of 24 ft (7.3 m) above the floor.
(2) A flat, horizontal beamed ceiling, with a maximum ceiling height of 24 ft (7.3 m), with beams up to 14 in. (350 mm) deep with pendent sprinklers under the beams. The compartment containing the beamed ceiling shall be a maximum of 600 ft^2 (56 m^2) in area. The highest sprinkler in the compartment shall be above all openings from the compartment into any communicating spaces.
(3) A smooth, flat, sloped ceiling with no beams up to a maximum slope of 8 in 12. The highest portion of the ceiling shall not be more than 24 ft (7.3 m) above the floor. The highest sprinkler in the sloped portion of the ceiling shall be above all openings from the compartment containing the sloped ceiling into any communicating spaces.
(4) A sloped ceiling with beams up to 14 in. (350 mm) deep with pendent sprinklers under the beams. The compartment containing the sloped, beamed ceiling shall be a maximum of 600 ft^2 (56 m^2) in area. The slope of the ceiling shall be between 2 in 12 and 8 in 12. The highest portion of the ceiling shall not be more than 24 ft (7.3 m) above the floor. The highest sprinkler in the sloped portion of the ceiling shall be above all openings from the compartment containing the sloped ceiling into any communicating spaces.
(5) A sloped ceiling with beams of any depth with sidewall or pendent sprinklers in each pocket formed by the beams. The compartment containing the sloped, beamed ceiling shall be a maximum of 600 ft^2 (56 m^2) in area. The slope of the ceiling shall be between 2 in 12 and 8 in 12. The highest portion of the ceiling shall not be more than 24 ft (7.3 m) above the floor.

10.2.2 Listed flows associated with testing under a smooth, flat, horizontal 8 ft (2.4 m) high ceiling shall be permitted to be used for the ceiling configurations referenced in 10.2.1.

10.2.3 For situations not meeting one of the conditions in 10.2.1, residential sprinklers listed for use in specific ceiling configurations shall be permitted to be used in accordance with their listing.

10.2.4* For situations not meeting one of the conditions in 10.2.1 and 10.2.3, the number of sprinklers in the design area shall be determined in consultation with the authority having jurisdiction as appropriate for the conditions.

10.3 Piping Configurations.

10.3.1 The piping configuration shall be permitted to be looped.

10.3.2 The piping configuration shall be permitted to be gridded except where gridded systems are prohibited by Chapter 9.

10.3.3 The piping configuration shall be permitted to be straight run.

10.3.4 The piping configuration shall be permitted to be a combination of the configurations permitted in 10.3.1 through 10.3.3.

10.4 Pipe Sizing.

10.4.1 For specially listed piping products, friction loss for pipe and fittings shall be permitted to be calculated based on the manufacturer's data.

10.4.2 Minimum Pipe Size.

10.4.2.1 The minimum size of steel pipe shall be 1 in. (25 mm).

10.4.2.2 The minimum size of pipe other than steel pipe shall be ¾ in. (20 mm) unless smaller sizes are permitted by 10.4.2.3.

10.4.2.3* Along with listed special fittings, ½ in. (15 mm) nonmetallic pipe and ½ in. (15 mm) copper pipe shall be permitted to be used only in network systems under the following conditions:

(1)* Each sprinkler shall be supplied through a minimum of three separate paths from the supply manifold.
(2) Calculations shall clearly indicate the pipes that create the paths to each sprinkler.
(3) A water distribution pipe that supplies a sprinkler shall not terminate in a dead end.
(4) Hydraulic calculations shall be prepared for each sprinkler flowing individually within the system and for each pair of sprinklers within the same compartment.
(5) The location of the most demanding single sprinkler and pair of sprinklers, including their pressure and flow requirements, shall be indicated on the plan review documents.

(6) The system shall be hydraulically calculated in accordance with the provisions of NFPA 13, except that the friction loss straight through a fitting shall be included.
(7) The method of joining the pipe to fittings or to other pipe shall be in accordance with the applicable plumbing code.
(8) A maximum of one insert tee shall be permitted in each pipe section between sprinklers to serve only domestic fixtures.
(9) When insert fittings are installed, each sprinkler shall have four separate paths from the water supply.
(10) The piping supplying only plumbing fixtures shall be in accordance with the applicable plumbing code.

10.4.3 The pipes shall be sized using one of the following techniques:

(1) The simplified calculation method of 10.4.4, which can only be used for connections to a city water main of at least 4 in. (100 mm) in diameter
(2) The prescriptive pipe sizing method of 10.4.9
(3) The hydraulic calculation procedure for NFPA 13
(4) The manufacturer's listed installation instructions

10.4.4* General Pipe Sizing Method. The following is the general pipe sizing method for straight-run systems connected to a city water main of at least 4 in. (100 mm) in diameter in accordance with 10.4.3(1):

(1) The system flow rate shall be established in accordance with Sections 10.1 and 10.2, and it shall be determined that the flow allowed by the water meter meets or exceeds the system demand and that the total demand flow does not exceed the maximum flow allowed by the piping system components.
(2) The water pressure in the street shall be determined.
(3) Pipe sizes shall be selected.
(4)* Pressure loss for a water meter, if any, shall be determined and deducted using one of the following:
  (a) Table 10.4.4(a) shall be permitted to be used, even where the sprinkler demand flow exceeds the meter's rated continuous flow.
  (b) Higher pressure losses specified by the manufacturer shall be used in place of those specified in Table 10.4.4(a).
  (c) Lower pressure losses shall be permitted to be used where supporting data are provided by the meter manufacturer.
(5) Pressure loss for elevation shall be deducted as follows:
  (a) Building height above street (ft) × 0.433 = pressure loss (psi)
  (b) Building height above street (m) × 0.098 = pressure loss (bar)
(6)* Pressure losses from the city main to the inside control valve shall be deducted by multiplying the pressure loss associated with the pipe material by the total length(s) of pipe in feet (meters).
(7) Pressure loss for piping within the building shall be deducted by multiplying the pressure loss associated with the pipe material by the total length(s) of pipe in feet (meters).
(8) Pressure loss for valves and fittings shall be deducted as follows:
  (a) The valves and fittings from the control valve to the farthest sprinkler shall be counted.
  (b) The equivalent length for each valve and fitting as shown in Table 10.4.4(b), Table 10.4.4(c), Table 10.4.4(d), Table 10.4.4(e), or as specified by the manufacturer shall be determined and the values added to obtain the total equivalent length for each pipe size.
  (c) The equivalent length for each size shall be multiplied by the pressure loss associated with the pipe material and the values totaled.
(9) In multilevel buildings, the steps in 10.4.4(1) through 10.4.4(8) shall be repeated to size piping for each floor.
(10) If the remaining pressure is less than the operating pressure established by the testing laboratory for the sprinkler being used, the sprinkler system shall be redesigned.
(11) If the remaining pressure is higher than required, smaller piping shall be permitted to be used where justified by calculations.
(12) The remaining piping shall be sized the same as the piping up to and including the farthest sprinkler unless smaller pipe sizes are justified by calculations.

10.4.5 To size piping for systems with an elevated tank, pump, or pump–tank combination, the pressure at the water supply outlet shall be determined and the steps in 10.4.4(3), 10.4.4(4), 10.4.4(7), 10.4.4(8), 10.4.4(9), 10.4.4(10), and 10.4.4(11) shall be followed.

10.4.6 Hydraulic calculation procedures in accordance with NFPA 13 shall be used for grid-type systems.

10.4.6.1 Where the water supply is a public or private water main 4 in. (100 mm) nominal in size or larger, only the static pressure measured at the main shall be required for performing hydraulic calculations.

Table 10.4.4(a) Pressure Losses in psi in Water Meters

Meter Size (in.)	Flow (gpm) (L/min)					
	18 or less (68)	23 (87)	26 (98)	31 (117)	39 (148)	52 (197)
⅝ (15 mm)	9 (0.67 bar)	14 (0.97 bar)	18 (1.2 bar)	26 (1.8 bar)	38 (2.6 bar)	*
¾ (20 mm)	7 (0.48 bar)	11 (0.76 bar)	14 (1.5 bar)	22 (1.5 bar)	35 (2.4 bar)	*
	2 (0.14 bar)	3 (0.21 bar)	3 (0.21 bar)	4 (0.28 bar)	6 (0.41 bar)	10 (0.69 bar)
1½ (40 mm)	1 (0.07 bar)	1 (0.07 bar)	2 (0.14 bar)	2 (0.14 bar)	4 (0.28 bar)	7 (0.48 bar)
2 (50 mm)	1 (0.07 bar)	1 (0.07 bar)	1 (0.07 bar)	1 (0.07 bar)	2 (0.14 bar)	3 (0.21 bar)

For SI units, 1 gpm = 3.785 L/min; 1 in. = 25 mm; 1 psi = 0.07 bar.
*Above maximum rated flow of commonly available meters.

Table 10.4.4(b) Equivalent Length in Feet of Fittings and Valves for Schedule 40 Steel Pipe

Diameter (in.)	45 Degree Elbow	90 Degree Elbow	Long-Radius Elbow	Tee or Cross (flow turned 90 degrees)	Tee or Cross (flow straight through)	Gate Valve	Angle Valve	Globe Valve	Globe "Y" Pattern Valve	Cock Valve	Check Valve
1 (25 mm)	1 (0.3 m)	2 (0.6 m)	2 (0.6 m)	5 (1.5 m)	2 (0.6 m)	0	12 (3.7 m)	28 (8.5 m)	15 (4.6 m)	4 (1.2 m)	5 (1.5 m)
1¼ (32 mm)	1 (0.3 m)	3 (0.9 m)	2 (0.6 m)	6 (1.8 m)	2 (0.6 m)	0	15 (4.6 m)	35 (10.7 m)	18 (5.5 m)	5 (1.5 m)	7 (2.1 m)
1½ (40 mm	2 (0.6 m)	4 (1.2 m)	2 (0.6 m)	8 (2.4 m)	3 (0.9 m)	0	18 (5.5 m)	43 (13.1 m)	22 (6.7 m)	6 (1.8 m)	9 (2.7 m)
2 (50 mm)	2 (0.6 m)	5 (1.5 m)	3 (0.9 m)	10 (3 m)	3 (0.9 m)	1 (0.3 m)	24 (7.3 m)	57 (17.4 m)	28 (8.5 m)	7 (2.1 m)	11 (3.3 m)

For SI units, 1 in. = 25 mm; 1 ft = 0.3 m.

Table 10.4.4(c) Equivalent Length in Feet of Fittings and Valves for Type K Copper Tube

Diameter (in.)	45 Degree Elbow	90 Degree Elbow	Long-Radius Elbow	Tee or Cross (flow turned 90 degrees)	Tee or Cross (flow straight through)	Gate Valve	Angle Valve	Globe Valve	Globe "Y" Pattern Valve	Cock Valve	Check Valve
¾ (20 mm)	0	1 (0.3 m)	0	3 (0.9 m)	1 (0.3 m)	0	7 (2.1 m)	14 (4.3 m)	7 (2.1 m)	2 (0.6 m)	0
1 (25 mm)	1 (0.3 m)	2 (0.6 m)	2 (0.6 m)	6 (1.8 m)	2 (0.6 m)	0	14 (4.3 m)	33 (10 m)	18 (5.5 m)	5 (1.5 m)	6 (1.8 m)
1¼ (32 mm)	1 (0.3 m)	3 (0.9 m)	2 (0.6 m)	5 (1.5 m)	2 (0.6 m)	0	14 (4.3 m)	32 (9.8 m)	16 (4.9 m)	5 (1.5 m)	6 (1.8 m)
1½ (40 mm)	2 (0.6 m)	4 (1.2 m)	2 (0.6 m)	8 (2.4 m)	3 (0.9 m)	0	18 (5.5 m)	43 (13.1 m)	22 (6.7 m)	6 (1.8 m)	9 (2.7 m)
2 (50 mm)	2 (0.6 m)	6 (1.8 m)	3 (0.9 m)	12 (3.7 m)	4 (1.2 m)	1 (0.3 m)	28 (8.5 m)	66 (20.1 m)	33 (10 m)	8 (2.4 m)	13 (4 m)

For SI units, 1 in. = 25 mm; 1 ft = 0.3 m.

Table 10.4.4(d) Equivalent Length in Feet of Fittings and Valves for Type L Copper Tube

Diameter (in.)	45 Degree Elbow	90 Degree Elbow	Long-Radius Elbow	Tee or Cross (flow turned 90 degrees)	Tee or Cross (flow straight through)	Gate Valve	Angle Valve	Globe Valve	Globe "Y" Pattern Valve	Cock Valve	Check Valve
¾ (20 mm)	0	2 (0.6 m)	0	4 (1.2 m)	1 (0.3 m)	0	8 (2.4 m)	18 (5.5 m)	10 (3 m)	3 (0.9 m)	0
1 (25 mm)	1 (0.3 m)	3 (0.9 m)	3 (0.9 m)	7 (2.1 m)	2 (0.6 m)	0	16 (4.9 m)	38 (11.6 m)	20 (6.1 m)	5 (2.1 m)	7 (2.1 m)
1¼ (32 mm)	1 (0.3 m)	3 (0.9 m)	2 (0.6 m)	6 (1.8 m)	2 (0.6 m)	0	15 (4.6 m)	35 (10.7 m)	18 (5.5 m)	5 (1.5 m)	7 (2.1 m)
1½ (40 mm)	2 (0.6 m)	4 (1.2 m)	2 (0.6 m)	9 (2.7 m)	3 (0.9 m)	0	20 (6.1 m)	47 (14.3 m)	24 (7.3 m)	7 (2.1 m)	10 (3 m)
2 (50 mm)	2 (0.6 m)	6 (1.8 m)	4 (1.2 m)	12 (3.7 m)	4 (1.2 m)	1 (0.3 m)	30 (9.1 m)	71 (21.6 m)	35 (10.7 m)	9 (2.7 m)	14 (4.3 m)

For SI units, 1 in. = 25 mm; 1 ft = 0.3 m.

Table 10.4.4(e) Equivalent Length in Feet of Fittings and Valves for Type M Copper Tube

Diameter (in.)	45 Degree Elbow	90 Degree Elbow	Long-Radius Elbow	Tee or Cross (flow turned 90 degrees)	Tee or Cross (flow straight through)	Gate Valve	Angle Valve	Globe Valve	Globe "Y" Pattern Valve	Cock Valve	Check Valve
¾ (20 mm)	0	2 (0.6 m)	0	4 (1.2 m)	1 (0.3 m	0	10 (3 m)	21 (6.4 m)	11 (3.3 m)	3 (0.9 m)	0
1 (25 mm)	2 (0.6 m)	3 (0.9 m)	3 (0.9 m)	8 (2.4 m)	3 (0.9 m)	0	19 (5.8 m)	43 (13.1 m)	23 (7 m)	6 (1.8 m)	8 (2.1 m)
1¼ (32 mm)	1 (0.3 m)	3 (0.9 m)	2 (0.6 m)	7 (2.1 m)	2 (0.6 m)	0	16 (4.9 m)	38 (11.5 m)	20 (6.1 m)	5 (1.5 m)	8 (2.4 m)
1½ (40 mm)	2 (0.6 m)	5 (1.5 m)	2 (0.6 m)	9 (2.7 m)	3 (0.9 m)	0	21 (6.4 m)	50 (15.2 m)	26 (7.9 m)	7 (2.1 m)	11 (3.3 m)
2 (50 mm)	3 (0.9 m)	7 (2.1 m)	4 (1.2 m)	13 (4 m)	5 (1.5 m)	1 (0.3 m)	32 (9.8 m)	75 (22.9 m)	37 (11.3 m)	9 (2.7 m)	14 (4.3 m)

For SI units, 1 in. = 25 mm; 1 ft = 0.3048 m.

10.4.7 Hydraulic calculation procedures in accordance with NFPA 13 shall be used for looped-type systems.

10.4.7.1 Where the water supply is a public or private water main 4 in. (100 mm) nominal in size or larger, only the static pressure measured at the main shall be required for performing hydraulic calculations.

10.4.8 Hydraulic calculation procedures in accordance with NFPA 13 shall be used for systems connected to city water mains of less than 4 in. (100 mm) in diameter.

10.4.9 Prescriptive Pipe Sizing Method. Pipe shall be sized by determining the available pressure to offset friction loss in piping and identifying a piping material, diameter, and length using the equation in 10.4.9.1 and the procedure in 10.4.9.2.

10.4.9.1 Available Pressure Equation. The pressure available to offset friction loss in the interior piping system (P_t) shall be determined in accordance with the following formula:

[10.4.9.1]

$$P_t = P_{sup} - PL_{sw} - PL_m - PL_d - PL_e - P_{sp}$$

where:

P_t = pressure used in applying Table 10.4.9.2(a) through Table 10.4.9.2(h)
P_{sup} = pressure available from the water supply source
PL_{sw} = pressure loss in the water service pipe
PL_m = pressure loss in the water meter
PL_d = pressure loss from devices other than the water meter
PL_e = pressure loss associated with changes in elevation
P_{sp} = maximum pressure required by a sprinkler

10.4.9.2 Calculation Procedure. Determination of the required size for water distribution piping shall be in accordance with the following procedure:

(1) *Step 1 — Determine P_{sup}.* Obtain the static supply pressure that will be available from the water main from the water purveyor or from a private source, such as a tank system, a private well system, or a combination of these. For a private source, the available water supply pressure shall be based on the minimum pressure control setting for the pump.

(2) *Step 2 — Determine PL_{sw}.* Use Table 10.4.9.2(a) to determine the pressure loss in the water service pipe based on the selected size of the water service.

(3) *Step 3 — Determine PL_m.* Use Table 10.4.4(a) to determine the pressure loss from the water meter based on the selected water meter size. Where the actual water meter pressure loss is known, PL_m shall be the actual loss.

(4) *Step 4 — Determine PL_d.* Determine the pressure loss from devices, other than the water meter, installed in the piping system supplying sprinklers, such as pressure-reducing valves, backflow preventers, water softeners, or water filters, taking into account the following:

(a) Device pressure losses shall be based on the device manufacturer's specifications.
(b) The flow rate used to determine pressure loss shall be the rate from Section 10.1, except that 5 gpm (20 L/min) shall be added where the device is installed in a water service pipe that supplies more than one dwelling.
(c) As an alternative to deducting pressure loss for a device, an automatic bypass valve shall be installed to divert flow around the device when a sprinkler activates.

(5) *Step 5 — Determine PL_e.* Use Table 10.4.9.2(b) to determine the pressure loss associated with changes in elevation. The elevation used in applying the table shall be the difference between the elevation where the water source pressure was measured and the elevation of the highest sprinkler.

(6) *Step 6 — Determine PL_{sp}.* Determine the maximum pressure required by any individual sprinkler based on the following:

(a) The area of coverage
(b) The ceiling configuration
(c) The temperature rating
(d)* Any additional conditions specified by the sprinkler manufacturer

(7) *Step 7 — Calculate PL_t.* Using the equation in 10.4.9.1, calculate the pressure available to offset friction loss in water distribution piping between the service valve and the sprinklers.

(8) *Step 8 — Determine the maximum allowable pipe length.* Use Table 10.4.9.2(c) through Table 10.4.9.2(h) to select a material and size for water distribution piping. The piping material and size shall be acceptable if the developed length of pipe between the service valve and the most remote sprinkler does not exceed the maximum allowable length specified by the applicable table. Interpolation of P_t between the tabular values shall be permitted.

10.4.9.3 The maximum allowable length of piping in Table 10.4.9.2(c) through Table 10.4.9.2(h) incorporates an adjustment for pipe fittings, and no additional consideration of friction losses associated with pipe fittings shall be required.

Table 10.4.9.2(a) Water Service Pressure Loss (PL_{svc})

	¾ in. Water Service Pressure Loss (psi)				1 in. Water Service Pressure Loss (psi)				1¼ in. Water Service Pressure Loss (psi)			
Flow Rate* (gpm)	40 ft or less	41 ft to 75 ft	76 ft to 100 ft	101 ft to 150 ft	40 ft or less	41 ft to 75 ft	76 ft to 100 ft	101 ft to 150 ft	40 ft or less	41 ft to 75 ft	76 ft to 100 ft	101 ft to 150 ft
8	5.1	8.7	11.8	17.4	1.5	2.5	3.4	5.1	0.6	1.0	1.3	1.9
10	7.7	13.1	17.8	26.3	2.3	3.8	5.2	7.7	0.8	1.4	2.0	2.9
12	10.8	18.4	24.9	NP	3.2	5.4	7.3	10.7	1.2	2.0	2.7	4.0
14	14.4	24.5	NP	NP	4.2	7.1	9.6	14.3	1.6	2.7	3.6	5.4
16	18.4	NP	NP	NP	5.4	9.1	12.4	18.3	2.0	3.4	4.7	6.9
18	22.9	NP	NP	NP	6.7	11.4	15.4	22.7	2.5	4.3	5.8	8.6
20	27.8	NP	NP	NP	8.1	13.8	18.7	27.6	3.1	5.2	7.0	10.4
22	NP	NP	NP	NP	9.7	16.5	22.3	NP	3.7	6.2	8.4	12.4
24	NP	NP	NP	NP	11.4	19.3	26.2	NP	4.3	7.3	9.9	14.6
26	NP	NP	NP	NP	13.2	22.4	NP	NP	5.0	8.5	11.4	16.9
28	NP	NP	NP	NP	15.1	25.7	NP	NP	5.7	9.7	13.1	19.4
30	NP	NP	NP	NP	17.2	NP	NP	NP	6.5	11.0	14.9	22.0
32	NP	NP	NP	NP	19.4	NP	NP	NP	7.3	12.4	16.8	24.8
34	NP	NP	NP	NP	21.7	NP	NP	NP	8.2	13.9	18.8	NP
36	NP	NP	NP	NP	24.1	NP	NP	NP	9.1	15.4	20.9	NP
	20 mm Pipe				25 mm Pipe				32 mm Pipe			
Rate* (L/min)	12 m or less	13 m to 23 m	23 m to 30 m	31 m to 49 m	12 m or less	13 m to 23 m	23 m to 30 m	31 m to 49 m	12 m or less	13 m to 23 m	23 m to 30 m	31 m to 49 m
30	0.4	0.6	0.8	1.2	0.1	0.2	0.2	0.4	0.0	0.1	0.1	0.1
38	0.5	0.9	1.2	1.8	0.2	0.3	0.4	0.5	0.1	0.1	0.1	0.2
45	0.7	1.3	1.7	NP	0.2	0.4	0.5	0.7	0.1	0.1	0.2	0.3
53	1.0	1.7	NP	NP	0.3	0.5	0.7	1.0	0.1	0.2	0.2	0.4
61	1.3	NP	NP	NP	0.4	0.6	0.9	1.3	0.1	0.2	0.3	0.5
68	1.6	NP	NP	NP	0.5	0.8	1.1	1.6	0.2	0.3	0.4	0.6
76	1.9	NP	NP	NP	0.6	1.0	1.3	1.9	0.2	0.4	0.5	0.7
83	NP	NP	NP	NP	0.7	1.1	1.5	NP	0.3	0.4	0.6	0.9
91	NP	NP	NP	NP	0.8	1.3	1.8	NP	0.3	0.5	0.7	1.0
98	NP	NP	NP	NP	0.9	1.5	NP	NP	0.3	0.6	0.8	1.2
106	NP	NP	NP	NP	1.0	1.8	NP	NP	0.4	0.7	0.9	1.3
114	NP	NP	NP	NP	1.2	NP	NP	NP	0.4	0.8	1.0	1.5
121	NP	NP	NP	NP	1.3	NP	NP	NP	0.5	0.9	1.2	1.7
129	NP	NP	NP	NP	1.5	NP	NP	NP	0.6	1.0	1.3	NP
136	NP	NP	NP	NP	1.7	NP	NP	NP	0.6	1.1	1.4	NP

NP: Not permitted. Pressure loss exceeds reasonable limits.

Notes:

(1) Values are applicable for underground piping materials permitted by the local plumbing code and are based on an SDR of 11 and a Hazen-Williams *C* factor of 150.

(2) Values include the following length allowances for fittings: 25 percent length increase for actual lengths up to 100 ft (30.5 m) and 15 percent length increase for actual lengths over 100 ft (30.5 m).

*Flow rate from Sections 10.1 and 10.2. Add 5 gpm (18.9 L/min) to the flow rate required by 10.4.9.2, Step 4, where the water service pipe supplies more than one dwelling.

Table 10.4.9.2(b) Elevation Loss (PL_e)

Elevation		Pressure Loss	
ft	m	psi	bar
5	1.5	2.2	0.15
10	3	4.4	0.30
15	4.6	6.5	0.45
20	6.1	8.7	0.6
25	7.6	10.9	0.75
30	9.1	13.0	0.89
35	11	15.2	1.0
40	12	17.4	1.2

Table 10.4.9.2(c) Allowable Pipe Length for ¾ in. Type M Copper Water Tubing

Sprinkler Flow Rate* (gpm)	Water Distribution Size (in.)	Available Pressure, P_i (psi)									
		15	20	25	30	35	40	45	50	55	60
		Allowable Length of Pipe from Service Valve to Farthest Sprinkler (ft)									
8	¾	217	289	361	434	506	578	650	723	795	867
9	¾	174	232	291	349	407	465	523	581	639	697
10	¾	143	191	239	287	335	383	430	478	526	574
11	¾	120	160	200	241	281	321	361	401	441	481
12	¾	102	137	171	205	239	273	307	341	375	410
13	¾	88	118	147	177	206	235	265	294	324	353
14	¾	77	103	128	154	180	205	231	257	282	308
15	¾	68	90	113	136	158	181	203	226	248	271
16	¾	60	80	100	120	140	160	180	200	220	241
17	¾	54	72	90	108	125	143	161	179	197	215
18	¾	48	64	81	97	113	129	145	161	177	193
19	¾	44	58	73	88	102	117	131	146	160	175
20	¾	40	53	66	80	93	106	119	133	146	159
21	¾	36	48	61	73	85	97	109	121	133	145
22	¾	33	44	56	67	78	89	100	111	122	133
23	¾	31	41	51	61	72	82	92	102	113	123
24	¾	28	38	47	57	66	76	85	95	104	114
25	¾	26	35	44	53	61	70	79	88	97	105
26	¾	24	33	41	49	57	65	73	82	90	98
27	¾	23	30	38	46	53	61	69	76	84	91
28	¾	21	28	36	43	50	57	64	71	78	85
29	¾	20	27	33	40	47	53	60	67	73	80
30	¾	19	25	31	38	44	50	56	63	69	75
31	¾	18	24	29	35	41	47	53	59	65	71
32	¾	17	22	28	33	39	44	50	56	61	67
33	¾	16	21	26	32	37	42	47	53	58	63
34	¾	NP	20	25	30	35	40	45	50	55	60
35	¾	NP	19	24	28	33	38	42	47	52	57
36	¾	NP	18	22	27	31	36	40	45	49	54
37	¾	NP	17	21	26	30	34	38	43	47	51
38	¾	NP	16	20	24	28	32	36	40	45	49
39	¾	NP	15	19	23	27	31	35	39	42	46
40	¾	NP	NP	18	22	26	29	33	37	40	44

Sprinkler Flow Rate (L/min)	Available Pressure P_i (bar)									
	1.0	1.4	1.7	2.1	2.4	2.8	2.9	3.4	3.8	4.1
	Allowable Length of Pipe from Service Valve to Farthest Sprinkler (m)									
30	66	88	110	132	154	176	198	220	242	264
34	53	71	89	106	124	142	159	177	195	212
38	44	58	73	87	102	117	131	146	160	175
42	37	49	61	73	86	98	110	122	134	147
45	31	42	52	62	73	83	94	104	114	125
49	27	36	45	54	63	72	81	90	99	108
53	23	31	39	47	55	62	70	78	86	94
57	21	27	34	41	48	55	62	69	76	83
61	18	24	30	37	43	49	55	61	67	73
64	16	22	27	33	38	44	49	55	60	66
68	15	20	25	30	34	39	44	49	54	59
72	13	18	22	27	31	36	40	45	49	53
76	12	16	20	24	28	32	36	41	45	48
79	11	15	19	22	26	30	33	37	41	44
83	10	13	17	20	24	27	30	34	37	41
87	9.4	12	16	19	22	25	28	31	34	37
91	8.5	12	14	17	20	23	26	29	32	35
95	7.9	11	13	16	19	21	24	27	30	32
98	7.3	10	12	15	17	20	22	25	27	30
102	7.0	9.1	12	14	16	19	21	23	26	28
106	6.4	8.5	11	13	15	17	20	22	24	26
110	6.1	8.2	10	12	14	16	18	20	22	24
114	5.8	7.6	9.4	12	13	15	17	19	21	23
117	5.5	7.3	8.8	11	12	14	16	18	20	22
121	5.2	6.7	8.5	10	12	13	15	17	19	20
125	4.9	6.4	7.9	9.8	11	13	14	16	18	19
129	NP	6.1	7.6	9.1	11	12	14	15	17	18
132	NP	5.8	7.3	8.5	10	12	13	14	16	17
136	NP	5.5	6.7	8.2	9.4	11	12	14	15	16
140	NP	5.2	6.4	7.9	9.1	10	12	13	14	16
144	NP	4.9	6.1	7.3	8.5	9.8	11	12	14	15
148	NP	4.6	5.8	7.0	8.2	9.4	11	12	13	14
151	NP	NP	5.5	6.7	7.9	8.8	10	11	12	13

NP: Not permitted.

*Flow rate from Sections 10.1 and 10.2.

Table 10.4.9.2(d) Allowable Pipe Length for 1 in. Type M Copper Water Tubing

Sprinkler Flow Rate* (gpm)	Water Distribution Size (in.)	Available Pressure, P_t (psi)									
		15	20	25	30	35	40	45	50	55	60
		Allowable Length of Pipe from Service Valve to Farthest Sprinkler (ft)									
8	1	806	1075	1343	1612	1881	2149	2418	2687	2955	3224
9	1	648	864	1080	1296	1512	1728	1945	2161	2377	2593
10	1	533	711	889	1067	1245	1422	1600	1778	1956	2134
11	1	447	596	745	894	1043	1192	1341	1491	1640	1789
12	1	381	508	634	761	888	1015	1142	1269	1396	1523
13	1	328	438	547	657	766	875	985	1094	1204	1313
14	1	286	382	477	572	668	763	859	954	1049	1145
15	1	252	336	420	504	588	672	756	840	924	1008
16	1	224	298	373	447	522	596	671	745	820	894
17	1	200	266	333	400	466	533	600	666	733	799
18	1	180	240	300	360	420	479	539	599	659	719
19	1	163	217	271	325	380	434	488	542	597	651
20	1	148	197	247	296	345	395	444	493	543	592
21	1	135	180	225	270	315	360	406	451	496	541
22	1	124	165	207	248	289	331	372	413	455	496
23	1	114	152	190	228	267	305	343	381	419	457
24	1	106	141	176	211	246	282	317	352	387	422
25	1	98	131	163	196	228	261	294	326	359	392
26	1	91	121	152	182	212	243	273	304	334	364
27	1	85	113	142	170	198	226	255	283	311	340
28	1	79	106	132	159	185	212	238	265	291	318
29	1	74	99	124	149	174	198	223	248	273	298
30	1	70	93	116	140	163	186	210	233	256	280
31	1	66	88	110	132	153	175	197	219	241	263
32	1	62	83	103	124	145	165	186	207	227	248
33	1	59	78	98	117	137	156	176	195	215	234
34	1	55	74	92	111	129	148	166	185	203	222
35	1	53	70	88	105	123	140	158	175	193	210
36	1	50	66	83	100	116	133	150	166	183	199
37	1	47	63	79	95	111	126	142	158	174	190
38	1	45	60	75	90	105	120	135	150	165	181
39	1	43	57	72	86	100	115	129	143	158	172
40	1	41	55	68	82	96	109	123	137	150	164

Sprinkler Flow Rate (L/min)	Available Pressure P_t (bar)									
	1.0	1.4	1.7	2.1	2.4	2.8	2.9	3.4	3.8	4.1
	Allowable Length of Pipe from Service Valve to Farthest Sprinkler (m)									
30	246	328	409	491	573	655	737	819	901	983
34	198	263	329	395	461	527	593	659	725	790
38	162	217	271	325	379	433	488	542	596	650
42	136	182	227	272	318	363	409	454	500	545
45	116	155	193	232	271	309	348	387	426	464
49	100	134	167	200	233	267	300	333	367	400
53	87	116	145	174	204	233	262	291	320	349
57	77	102	128	154	179	205	230	256	282	307
61	68	91	114	136	159	182	205	227	250	272
64	61	81	101	122	142	162	183	203	223	244
68	55	73	91	110	128	146	164	183	201	219
72	50	66	83	99	116	132	149	165	182	198
76	45	60	75	90	105	120	135	150	166	180
79	41	55	69	82	96	110	124	137	151	165
83	38	50	63	76	88	101	113	126	139	151
87	35	46	58	69	81	93	105	116	128	139
91	32	43	54	64	75	86	97	107	118	129
95	30	40	50	60	69	80	90	99	109	119
98	28	37	46	55	65	74	83	93	102	111
102	26	34	43	52	60	69	78	86	95	104
106	24	32	40	48	56	65	73	81	89	97
110	23	30	38	45	53	60	68	76	83	91
114	21	28	35	43	50	57	64	71	78	85
117	20	27	34	40	47	53	60	67	73	80
121	19	25	31	38	44	50	57	63	69	76
125	18	24	30	36	42	48	54	59	66	71
129	17	23	28	34	39	45	51	56	62	68
132	16	21	27	32	37	43	48	53	59	64
136	15	20	25	30	35	41	46	51	56	61
140	14	19	24	29	34	38	43	48	53	58
144	14	18	23	27	32	37	41	46	50	55
148	13	17	22	26	30	35	39	44	48	52
151	12	17	21	25	29	33	37	42	46	50

*Flow rate from Sections 10.1 and 10.2.

Table 10.4.9.2(e) Allowable Pipe Length for ¾ in. CPVC (IPS) Pipe

Sprinkler Flow Rate* (gpm)	Water Distribution Size (in.)	Available Pressure, P_i (psi)									
		15	20	25	30	35	40	45	50	55	60
		Allowable Length of Pipe from Service Valve to Farthest Sprinkler (ft)									
8	¾	348	465	581	697	813	929	1045	1161	1278	1394
9	¾	280	374	467	560	654	747	841	934	1027	1121
10	¾	231	307	384	461	538	615	692	769	845	922
11	¾	193	258	322	387	451	515	580	644	709	773
12	¾	165	219	274	329	384	439	494	549	603	658
13	¾	142	189	237	284	331	378	426	473	520	568
14	¾	124	165	206	247	289	330	371	412	454	495
15	¾	109	145	182	218	254	290	327	363	399	436
16	¾	97	129	161	193	226	258	290	322	354	387
17	¾	86	115	144	173	202	230	259	288	317	346
18	¾	78	104	130	155	181	207	233	259	285	311
19	¾	70	94	117	141	164	188	211	234	258	281
20	¾	64	85	107	128	149	171	192	213	235	256
21	¾	58	78	97	117	136	156	175	195	214	234
22	¾	54	71	89	107	125	143	161	179	197	214
23	¾	49	66	82	99	115	132	148	165	181	198
24	¾	46	61	76	91	107	122	137	152	167	183
25	¾	42	56	71	85	99	113	127	141	155	169
26	¾	39	52	66	79	92	105	118	131	144	157
27	¾	37	49	61	73	86	98	110	122	135	147
28	¾	34	46	57	69	80	92	103	114	126	137
29	¾	32	43	54	64	75	86	96	107	118	129
30	¾	30	40	50	60	70	81	91	101	111	121
31	¾	28	38	47	57	66	76	85	95	104	114
32	¾	27	36	45	54	63	71	80	89	98	107
33	¾	25	34	42	51	59	68	76	84	93	101
34	¾	24	32	40	48	56	64	72	80	88	96
35	¾	23	30	38	45	53	61	68	76	83	91
36	¾	22	29	36	43	50	57	65	72	79	86
37	¾	20	27	34	41	48	55	61	68	75	82
38	¾	20	26	33	39	46	52	59	65	72	78
39	¾	19	25	31	37	43	50	56	62	68	74
40	¾	18	24	30	35	41	47	53	59	65	71
		Available Pressure P_i (bar)									
Sprinkler Flow Rate (L/min)		1.0	1.4	1.7	2.1	2.4	2.8	2.9	3.4	3.8	4.1
		Allowable Length of Pipe from Service Valve to Farthest Sprinkler (m)									
30		106	142	177	212	248	283	319	354	390	425
34		85	114	142	171	199	228	256	285	313	342
38		70	94	117	141	164	187	211	234	258	281
42		59	79	98	118	137	157	177	196	216	236
45		50	67	84	100	117	134	151	167	184	201
49		43	58	72	87	101	115	130	144	158	173
53		38	50	63	75	88	101	113	126	138	151
57		33	44	55	66	77	88	100	111	122	133
61		30	39	49	59	69	79	88	98	108	118
64		26	35	44	53	62	70	79	88	97	105
68		24	32	40	47	55	63	71	79	87	95
72		21	29	36	43	50	57	64	71	79	86
76		20	26	33	39	45	52	59	65	72	78
79		18	24	30	36	41	48	53	59	65	71
83		16	22	27	33	38	44	49	55	60	65
87		15	20	25	30	35	40	45	50	55	60
91		14	19	23	28	33	37	42	46	51	56
95		13	17	22	26	30	34	39	43	47	52
98		12	16	20	24	28	32	36	40	44	48
102		11	15	19	22	26	30	34	37	41	45
106		10	14	17	21	24	28	31	35	38	42
110		10	13	16	20	23	26	29	33	36	39
114		9.1	12	15	18	21	25	28	31	34	37
117		8.5	12	14	17	20	23	26	29	32	35
121		8.2	11	14	16	19	22	24	27	30	33
125		7.6	10	13	16	18	21	23	26	28	31
129		7.3	10	12	15	17	20	22	24	27	29
132		7.0	9.1	12	14	16	19	21	23	25	28
136		6.7	8.8	11	13	15	17	20	22	24	26
140		6.1	8.2	10	12	15	17	19	21	23	25
144		6.1	7.9	10	12	14	16	18	20	22	24
148		5.8	7.6	9.4	11	13	15	17	19	21	23
151		5.5	7.3	9.1	11	12	14	16	18	20	22

*Flow rate from Sections 10.1 and 10.2.

Table 10.4.9.2(f) Allowable Pipe Length for 1 in. CPVC (IPS) Pipe

Sprinkler Flow Rate* (gpm)	Water Distribution Size (in.)	Available Pressure, P_t (psi)									
		15	20	25	30	35	40	45	50	55	60
		Allowable Length of Pipe from Service Valve to Farthest Sprinkler (ft)									
8	1	1049	1398	1748	2098	2447	2797	3146	3496	3845	4195
9	1	843	1125	1406	1687	1968	2249	2530	2811	3093	3374
10	1	694	925	1157	1388	1619	1851	2082	2314	2545	2776
11	1	582	776	970	1164	1358	1552	1746	1940	2133	2327
12	1	495	660	826	991	1156	1321	1486	1651	1816	1981
13	1	427	570	712	854	997	1139	1281	1424	1566	1709
14	1	372	497	621	745	869	993	1117	1241	1366	1490
15	1	328	437	546	656	765	874	983	1093	1202	1311
16	1	291	388	485	582	679	776	873	970	1067	1164
17	1	260	347	433	520	607	693	780	867	954	1040
18	1	234	312	390	468	546	624	702	780	858	936
19	1	212	282	353	423	494	565	635	706	776	847
20	1	193	257	321	385	449	513	578	642	706	770
21	1	176	235	293	352	410	469	528	586	645	704
22	1	161	215	269	323	377	430	484	538	592	646
23	1	149	198	248	297	347	396	446	496	545	595
24	1	137	183	229	275	321	366	412	458	504	550
25	1	127	170	212	255	297	340	382	425	467	510
26	1	118	158	197	237	276	316	355	395	434	474
27	1	111	147	184	221	258	295	332	368	405	442
28	1	103	138	172	207	241	275	310	344	379	413
29	1	97	129	161	194	226	258	290	323	355	387
30	1	91	121	152	182	212	242	273	303	333	364
31	1	86	114	143	171	200	228	257	285	314	342
32	1	81	108	134	161	188	215	242	269	296	323
33	1	76	102	127	152	178	203	229	254	280	305
34	1	72	96	120	144	168	192	216	240	265	289
35	1	68	91	114	137	160	182	205	228	251	273
36	1	65	87	108	130	151	173	195	216	238	260
37	1	62	82	103	123	144	165	185	206	226	247
38	1	59	78	98	117	137	157	176	196	215	235
39	1	56	75	93	112	131	149	168	187	205	224
40	1	53	71	89	107	125	142	160	178	196	214

Sprinkler Flow Rate (L/min)	Available Pressure P_t (bar)									
	1.0	1.4	1.7	2.1	2.4	2.8	2.9	3.4	3.8	4.1
	Allowable Length of Pipe from Service Valve to Farthest Sprinkler (m)									
30	320	426	533	639	746	853	959	1066	1172	1279
34	257	343	429	514	600	685	771	857	943	1028
38	212	282	353	423	493	564	635	705	776	846
42	177	237	296	355	414	473	532	591	650	709
45	151	201	252	302	352	403	453	503	554	604
49	130	174	217	260	304	347	390	434	477	521
53	113	151	189	227	265	303	340	378	416	454
57	100	133	166	200	233	266	300	333	366	400
61	89	118	148	177	207	237	266	296	325	355
64	79	106	132	158	185	211	238	264	291	317
68	71	95	119	143	166	190	214	238	262	285
72	65	86	108	129	151	172	194	215	237	258
76	59	78	98	117	137	156	176	196	215	235
79	54	72	89	107	125	143	161	179	197	215
83	49	66	82	98	115	131	148	164	180	197
87	45	60	76	91	106	121	136	151	166	181
91	42	56	70	84	98	112	126	140	154	168
95	39	52	65	78	91	104	116	130	142	155
98	36	48	60	72	84	96	108	120	132	144
102	34	45	56	67	79	90	101	112	123	135
106	31	42	52	63	73	84	94	105	116	126
110	30	39	49	59	69	79	88	98	108	118
114	28	37	46	55	65	74	83	92	101	111
117	26	35	44	52	61	69	78	87	96	104
121	25	33	41	49	57	66	74	82	90	98
125	23	31	39	46	54	62	70	77	85	93
129	22	29	37	44	51	59	66	73	81	88
132	21	28	35	42	49	55	62	69	77	83
136	20	27	33	40	46	53	59	66	73	79
140	19	25	31	37	44	50	56	63	69	75
144	18	24	30	36	42	48	54	60	66	72
148	17	23	28	34	40	45	51	57	62	68
151	16	22	27	33	38	43	49	54	60	65

*Flow rate from Sections 10.1 and 10.2.

Table 10.4.9.2(g) Allowable Pipe Length for ¾ in. PEX Tubing

Sprinkler Flow Rate* (gpm)	Water Distribution Size (in.)	Available Pressure, P_i (psi)									
		15	20	25	30	35	40	45	50	55	60
		Allowable Length of Pipe from Service Valve to Farthest Sprinkler (ft)									
8	¾	93	123	154	185	216	247	278	309	339	370
9	¾	74	99	124	149	174	199	223	248	273	298
10	¾	61	82	102	123	143	163	184	204	225	245
11	¾	51	68	86	103	120	137	154	171	188	205
12	¾	44	58	73	87	102	117	131	146	160	175
13	¾	38	50	63	75	88	101	113	126	138	151
14	¾	33	44	55	66	77	88	99	110	121	132
15	¾	29	39	48	58	68	77	87	96	106	116
16	¾	26	34	43	51	60	68	77	86	94	103
17	¾	23	31	38	46	54	61	69	77	84	92
18	¾	21	28	34	41	48	55	62	69	76	83
19	¾	19	25	31	37	44	50	56	62	69	75
20	¾	17	23	28	34	40	45	51	57	62	68
21	¾	16	21	26	31	36	41	47	52	57	62
22	¾	NP	19	24	28	33	38	43	47	52	57
23	¾	NP	17	22	26	31	35	39	44	48	52
24	¾	NP	16	20	24	28	32	36	40	44	49
25	¾	NP	NP	19	22	26	30	34	37	41	45
26	¾	NP	NP	17	21	24	28	31	35	38	42
27	¾	NP	NP	16	20	23	26	29	33	36	39
28	¾	NP	NP	15	18	21	24	27	30	33	36
29	¾	NP	NP	NP	17	20	23	26	28	31	34
30	¾	NP	NP	NP	16	19	21	24	27	29	32
31	¾	NP	NP	NP	15	18	20	23	25	28	30
32	¾	NP	NP	NP	NP	17	19	21	24	26	28
33	¾	NP	NP	NP	NP	16	18	20	22	25	27
34	¾	NP	NP	NP	NP	NP	17	19	21	23	25
35	¾	NP	NP	NP	NP	NP	16	18	20	22	24
36	¾	NP	NP	NP	NP	NP	15	17	19	21	23
37	¾	NP	NP	NP	NP	NP	NP	16	18	20	22
38	¾	NP	NP	NP	NP	NP	NP	16	17	19	21
39	¾	NP	NP	NP	NP	NP	NP	NP	16	18	20
40	¾	NP	NP	NP	NP	NP	NP	NP	16	17	19
		Allowable Pipe Length for 20 mm PEX Tubing									
Sprinkler Flow Rate (L/min)		1.0	1.4	1.7	2.1	2.4	2.8	2.9	3.4	3.8	4.1
		Allowable Length of Pipe from Service Valve to Farthest Sprinkler (m)									
30		28	37	47	56	66	75	85	94	103	113
34		23	30	38	45	53	61	68	76	83	91
38		19	25	31	37	44	50	56	62	69	75
42		16	21	26	31	37	42	47	52	57	62
45		13	18	22	27	31	36	40	45	49	53
49		12	15	19	23	27	31	34	38	42	46
53		10	13	17	20	23	27	30	34	37	40
57		9	12	15	18	21	23	27	29	32	35
61		8	10	13	16	18	21	23	26	29	31
64		7	9	12	14	16	19	21	23	26	28
68		6	9	10	12	15	17	19	21	23	25
72		6	8	9	11	13	15	17	19	21	23
76		5	7	9	10	12	14	16	17	19	21
79		5	6	8	9	11	12	14	16	17	19
83		NP	6	7	9	10	12	13	14	16	17
87		NP	5	7	8	9	11	12	13	15	16
91		NP	5	6	7	9	10	11	12	13	15
95		NP	NP	6	7	8	9	10	11	12	14
98		NP	NP	5	6	7	9	9	11	12	13
102		NP	NP	5	6	7	8	9	10	11	12
106		NP	NP	5	5	6	7	8	9	10	11
110		NP	NP	NP	5	6	7	8	9	9	10
114		NP	NP	NP	5	6	6	7	8	9	10
117		NP	NP	NP	5	5	6	7	8	9	9
121		NP	NP	NP	NP	5	6	6	7	8	9
125		NP	NP	NP	NP	5	5	6	7	8	8
129		NP	NP	NP	NP	NP	5	6	6	7	8
132		NP	NP	NP	NP	NP	5	5	6	7	7
136		NP	NP	NP	NP	NP	5	5	6	6	7
140		NP	NP	NP	NP	NP	NP	5	5	6	7
144		NP	NP	NP	NP	NP	NP	5	5	6	6
148		NP	NP	NP	NP	NP	NP	NP	5	5	6
151		NP	NP	NP	NP	NP	NP	NP	5	5	6

NP: Not permitted.

*Flow rate from Sections 10.1 and 10.2.

Table 10.4.9.2(h) Allowable Pipe Length for 1 in. PEX Tubing

Sprinkler Flow Rate* (gpm)	Water Distribution Size (in.)	Available Pressure, P_t (psi)									
		15	20	25	30	35	40	45	50	55	60
		Allowable Length of Pipe from Service Valve to Farthest Sprinkler (ft)									
8	1	314	418	523	628	732	837	941	1046	1151	1255
9	1	252	336	421	505	589	673	757	841	925	1009
10	1	208	277	346	415	485	554	623	692	761	831
11	1	174	232	290	348	406	464	522	580	638	696
12	1	148	198	247	296	346	395	445	494	543	593
13	1	128	170	213	256	298	341	383	426	469	511
14	1	111	149	186	223	260	297	334	371	409	446
15	1	98	131	163	196	229	262	294	327	360	392
16	1	87	116	145	174	203	232	261	290	319	348
17	1	78	104	130	156	182	208	233	259	285	311
18	1	70	93	117	140	163	187	210	233	257	280
19	1	63	84	106	127	148	169	190	211	232	253
20	1	58	77	96	115	134	154	173	192	211	230
21	1	53	70	88	105	123	140	158	175	193	211
22	1	48	64	80	97	113	129	145	161	177	193
23	1	44	59	74	89	104	119	133	148	163	178
24	1	41	55	69	82	96	110	123	137	151	164
25	1	38	51	64	76	89	102	114	127	140	152
26	1	35	47	59	71	83	95	106	118	130	142
27	1	33	44	55	66	77	88	99	110	121	132
28	1	31	41	52	62	72	82	93	103	113	124
29	1	29	39	48	58	68	77	87	97	106	116
30	1	27	36	45	54	63	73	82	91	100	109
31	1	26	34	43	51	60	68	77	85	94	102
32	1	24	32	40	48	56	64	72	80	89	97
33	1	23	30	38	46	53	61	68	76	84	91
34	1	22	29	36	43	50	58	65	72	79	86
35	1	20	27	34	41	48	55	61	68	75	82
36	1	19	26	32	39	45	52	58	65	71	78
37	1	18	25	31	37	43	49	55	62	68	74
38	1	18	23	29	35	41	47	53	59	64	70
39	1	17	22	28	33	39	45	50	56	61	67
40	1	16	21	27	32	37	43	48	53	59	64

Sprinkler Flow Rate (L/min)	Available Pressure P_t (bar)									
	1.0	1.4	1.7	2.1	2.4	2.8	2.9	3.4	3.8	4.1
	Allowable Length of Pipe from Service Valve to Farthest Sprinkler (m)									
30	96	127	159	191	223	255	287	319	351	383
34	77	102	128	154	180	205	231	256	282	308
38	63	84	105	126	148	169	190	211	232	253
42	53	71	88	106	124	141	159	177	194	212
45	45	60	75	90	105	120	136	151	166	181
49	39	52	65	78	91	104	117	130	143	156
53	34	45	57	68	79	91	102	113	125	136
57	30	40	50	60	70	80	90	100	110	119
61	27	35	44	53	62	71	80	88	97	106
64	24	32	40	48	55	63	71	79	87	95
68	21	28	36	43	50	57	64	71	78	85
72	19	26	32	39	45	52	58	64	71	77
76	18	23	29	35	41	47	53	59	64	70
79	16	21	27	32	37	43	48	53	59	64
83	15	20	24	30	34	39	44	49	54	59
87	13	18	23	27	32	36	41	45	50	54
91	12	17	21	25	29	34	37	42	46	50
95	12	16	20	23	27	31	35	39	43	46
98	11	14	18	22	25	29	32	36	40	43
102	10	13	17	20	23	27	30	34	37	40
106	9.4	12	16	19	22	25	28	31	34	38
110	8.8	12	15	18	21	23	27	30	32	35
114	8.2	11	14	16	19	22	25	28	30	33
117	7.9	10	13	16	18	21	23	26	29	31
121	7.3	10	12	15	17	20	22	24	27	30
125	7.0	9.1	12	14	16	19	21	23	26	28
129	6.7	8.8	11	13	15	18	20	22	24	26
132	6.1	8.2	10	12	15	17	19	21	23	25
136	5.8	7.9	10	12	14	16	18	20	22	24
140	5.5	7.6	9.4	11	13	15	17	19	21	23
144	5.5	7.0	8.8	11	12	14	16	18	20	21
148	5.2	6.7	8.5	10	12	14	15	17	19	20
151	4.9	6.4	8.2	10	11	13	15	16	18	20

*Flow rate from Sections 10.1 and 10.2.

Chapter 11 System Acceptance

11.1 General.

11.1.1 The installer shall perform all required acceptance tests prior to asking for approval of the installation.

11.1.2 When the authority having jurisdiction is required to be present during the acceptance tests, the installer shall coordinate the time and date of testing with the authority having jurisdiction and other interested parties.

11.2 Acceptance Tests.

11.2.1* Hydrostatic Tests.

11.2.1.1 Where a fire department pumper connection is not provided, the system shall be hydrostatically tested at normal system operating pressure without evidence of leakage.

11.2.1.2 Where a fire department pumper connection is provided, the system shall pass a hydrostatic pressure test performed in accordance with NFPA 13.

11.2.1.3 Evidence of leakage shall be determined by a drop in pressure at a gauge over a period of 2 hours or by visually checking the piping system for leakage.

11.2.1.4 When systems are being hydrostatically tested, the test shall be permitted to be conducted with sprinklers or plugs installed in the fittings.

11.2.1.4.1 Any plugs used during the hydrostatic testing shall be replaced with sprinklers after the test is completed.

11.2.1.4.2 No additional hydrostatic testing shall be required after the sprinklers are installed.

11.2.2* Pump Tests.

11.2.2.1 Prior to system acceptance, a system utilizing a pump shall be tested by opening the drain/test connection.

11.2.2.1.1* The pump shall sense the flow, turn on, and flow water for the required duration of 6.1.2 or 6.1.3 without interruption.

11.2.3 System Operational Tests.

11.2.3.1 Waterflow Devices. Where waterflow detection devices are installed, these devices, including the associated alarm circuits, shall be flow tested through the inspector's test connection and shall result in an audible alarm on the premises.

11.2.3.2 Preaction Systems. The operation of the preaction system shall be tested in accordance with the manufacturer's instructions.

11.2.3.3 Dry Pipe and Double-Interlock Preaction Systems. A test shall be conducted in accordance with the valve manufacturer's instructions to measure the time to trip the valve and the time for water to be discharged from the inspector's test connection.

11.2.3.3.1 All times shall be measured from the time the inspector's test connection is completely open.

Chapter 12 Inspection, Testing, and Maintenance

12.1* General. The installer shall provide to the owner/occupant instructions on inspecting, testing, and maintaining the system.

12.2* Inspections and Tests. The sprinkler system shall be inspected and tested periodically to make sure the system is in good working condition.

12.3 Maintenance.

12.3.1 The sprinkler system shall be properly maintained in accordance with this standard and the manufacturers' instructions.

12.3.2 Any sprinkler that is operated, damaged, corroded, covered with foreign materials, or showing signs of leakage shall be replaced with a new listed sprinkler having the same performance characteristics as the original equipment.

12.3.2.1* Where replacing residential sprinklers manufactured prior to 2003 that are no longer available from the manufacturer and are installed using a design density less than 0.05 gpm/ft^2 (2.04 mm/min), a residential sprinkler with an equivalent K-factor (± 5 percent) shall be permitted to be used provided the currently listed coverage area for the replacement sprinkler is not exceeded.

12.3.3 Painting Sprinklers.

12.3.3.1 Sprinklers shall not be painted unless applied by the manufacturer.

12.3.3.2* Any sprinklers that have been painted outside of the factory shall be replaced with a new listed sprinkler.

12.3.4* Wet Pipe Systems. A wet pipe system shall be maintained above 40°F (4°C), including areas properly insulated to maintain 40°F (4°C).

12.3.5* Antifreeze Systems.

12.3.5.1 Annual Antifreeze Solution Test and Replacement Procedure.

12.3.5.1.1 Samples of antifreeze solution shall be collected by qualified individuals in accordance with 12.3.5.1.1.2 or 12.3.5.1.1.3 on an annual basis.

12.3.5.1.1.1 The system shall be drained to verify the following:

(1) The solution is in compliance with 9.2.2.1.1.
(2) The solution provides the necessary freeze protection.

12.3.5.1.1.2 Solution samples shall be taken near the beginning and near the end of the draining process.

12.3.5.1.1.3* Solution samples shall be taken at the highest practical elevation and the lowest practical elevation of the system.

12.3.5.1.2 The two samples collected in accordance with the procedures specified in 12.3.5.1.1.2 or 12.3.5.1.1.3 shall be tested to verify that the specific gravity of both samples is similar and that the solution is in compliance with 9.2.2.1.1.

12.3.5.1.2.1 The specific gravity of each solution shall be checked using a hydrometer with a suitable scale or a refractometer having a scale calibrated for the antifreeze solution.

12.3.5.1.3* If concentrations of the two samples collected in accordance with the procedures in 12.3.5.1.1.2 or 12.3.5.1.1.3 are similar and in compliance with 9.2.2.1.1, then (a) the solution drained in accordance with 12.3.5.1.1.1 can be used to refill the system, or (b) the existing undrained solution tested in accordance with 12.3.5.1.1.3 shall be permitted to continue to be used.

12.3.5.1.3.1 If the two samples are not similar and not in compliance with 9.2.2.1.1, then a solution in compliance with 9.2.2.1.1 shall be used to refill the system.

12.3.5.1.4 Tag.

12.3.5.1.4.1 A tag shall be attached to the riser indicating the date the antifreeze solution was tested.

12.3.5.1.4.2 The tag shall also indicate the type and concentration of antifreeze solution (by volume) with which the system is filled, the date the antifreeze was replaced (if applicable), the name of the contractor that tested and/or replaced the antifreeze solution, the contractor's license number, a statement indicating if the entire system was drained and replaced with antifreeze, and a warning to test the concentration of the antifreeze solutions at yearly intervals per this standard.

12.3.6 Inactive Systems.

12.3.6.1* In a detached dwelling or a manufactured home, the sprinkler system shall be permitted to be put in an inactive state for any of the following reasons:

(1) After a manufactured home has been installed and tested in the factory and is being prepared for shipment
(2) When a manufactured home is being stored for future occupancy
(3) When the detached dwelling is unoccupied during renovation work
(4) When the detached dwelling is unoccupied for an extended period of time

12.3.6.2 Where a wet pipe system is installed and the piping will be subject to freezing, the piping and the stored water supply shall be drained.

12.3.6.2.1* Where residential pendent and sidewall sprinklers are installed on drops that are 4 in. (100 mm) or less in length, the drops shall not be required to be drained.

12.3.6.3 The systems shall be placed back in service prior to occupancy.

12.3.6.4 Prior to the system being restored to service, the system shall be filled with water, pressurized to normal system pressure, and visually inspected for leaks.

12.3.6.5 Once the system has been restored to service, it shall be inspected and tested in accordance with Section 12.2.

Annex A Explanatory Material

Annex A is not a part of the requirements of this NFPA document but is included for informational purposes only. This annex contains explanatory material, numbered to correspond with the applicable text paragraphs.

A.1.1 This standard is appropriate for protection against fire hazards only in one- and two-family dwellings and manufactured homes. Residential portions of any other type of building occupancy or within mixed occupancies should be protected with sprinklers in accordance with NFPA 13 or NFPA 13R. Nonresidential portions of such buildings should be protected in accordance with NFPA 13 or NFPA 13R as appropriate for areas outside the dwelling unit.

The criteria in this standard are based on full-scale fire tests of rooms containing typical furnishings found in residential living rooms, kitchens, and bedrooms. The furnishings were arranged as typically found in dwelling units in a manner similar to that shown in Figure A.1.1(a), Figure A.1.1(b), and Figure A.1.1(c). Sixty full-scale fire tests were conducted in a two-story dwelling in Los Angeles, California, and 16 tests were conducted in a 14 ft (4.2 m) wide mobile home in Charlotte, North Carolina.

Sprinkler systems designed and installed according to this standard are expected to prevent flashover within the compartment of origin where sprinklers are installed in the compartment. A sprinkler system designed and installed according to this standard cannot, however, be expected to completely control a fire involving fuel loads that are significantly higher than average for dwelling units [10 lb/ft^2 (49 kg/m^2)] and where the interior finish exhibits either a high flame spread index (greater than 200, corresponding to a Class C) when tested in accordance with ASTM E84, *Standard Test Method for Surface Burning Characteristics of Building Materials*, or UL 723, *Test for Surface Burning Characteristics of Building Materials*, or a high heat release (such as a heat release rate exceeding 800 kW) when tested in accordance with NFPA 286.

(For protection of multifamily dwellings, see NFPA 13 or NFPA 13R.)

A.1.2 While the purpose of this standard is to provide improved protection against injury and loss of life, the use of these systems has demonstrated an ability to provide improved protection against property damage. Various levels of fire safety are available to dwelling occupants to provide life safety and property protection.

This standard recommends, but does not require, sprinklering of all areas in a dwelling; it permits sprinklers to be omitted in certain areas. These areas have been proved by NFPA statistics *[see Table A.1.2(a), Table A.1.2(b), and Table A.1.2(c)]* to be those where the incidence of life loss from fires in dwellings is low. Such an approach provides a reasonable degree of fire safety. Greater protection to both life and property is achieved by sprinklering all areas.

Guidance for the installation of smoke detectors and fire detection systems is found in *NFPA 72*.

A.1.5.1 For additional conversions and information, see ASTM SI10, *IEEE/ASTM SI 10 American National Standard for Metric Practice*.

A.1.5.4 A given equivalent value is considered to be approximate.

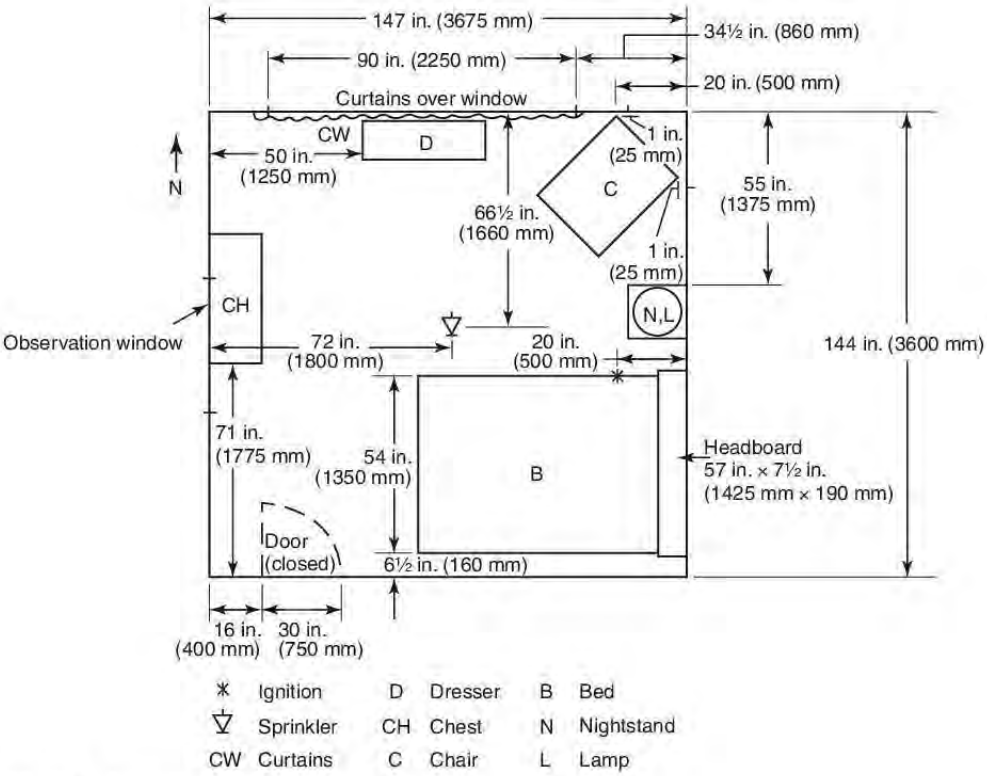

FIGURE A.1.1(a) Bedroom.

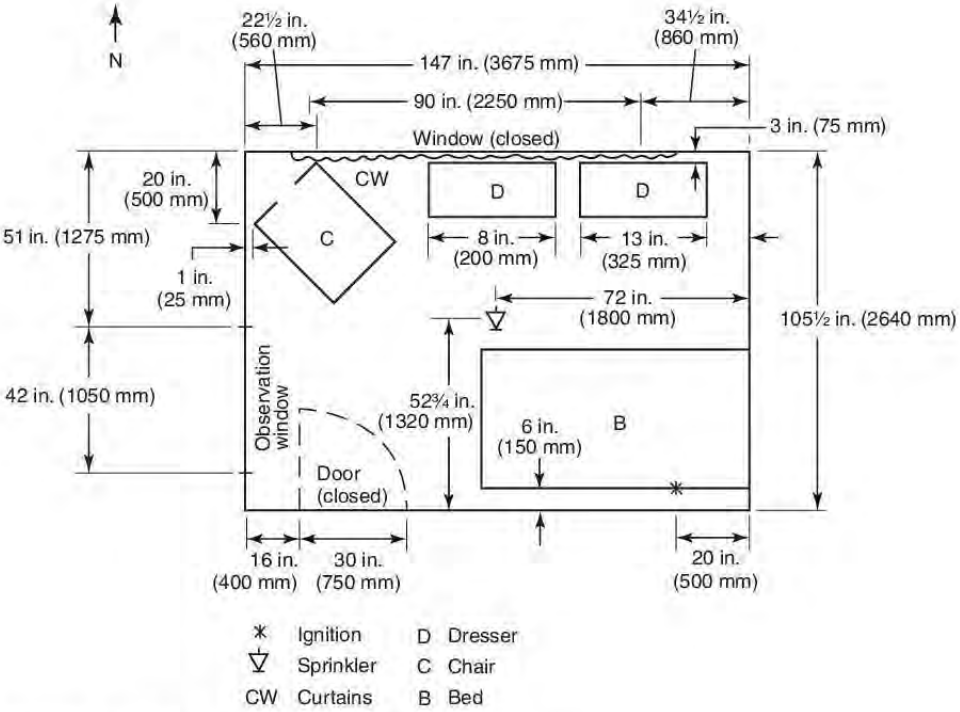

FIGURE A.1.1(b) Manufactured Home Bedroom.

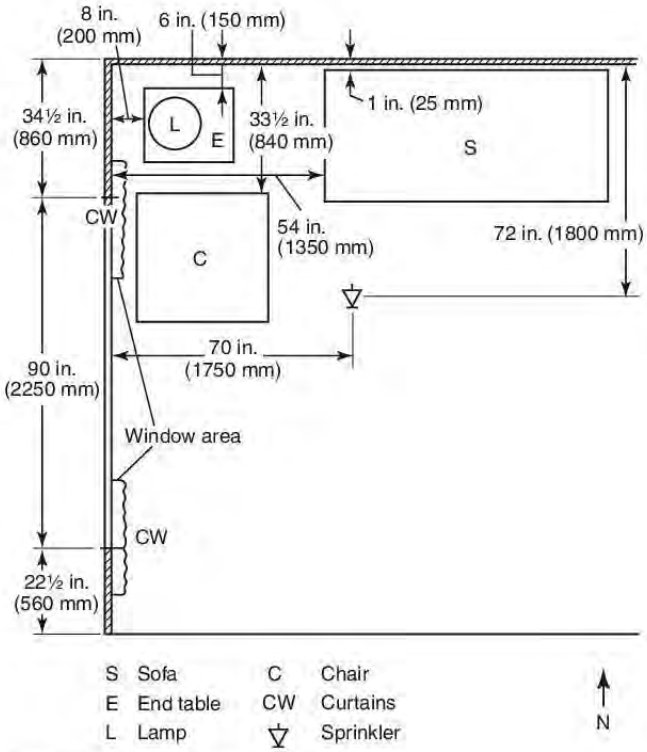

FIGURE A.1.1(c) Living Room.

A.3.2.1 Approved. The National Fire Protection Association does not approve, inspect, or certify any installations, procedures, equipment, or materials; nor does it approve or evaluate testing laboratories. In determining the acceptability of installations, procedures, equipment, or materials, the authority having jurisdiction may base acceptance on compliance with NFPA or other appropriate standards. In the absence of such standards, said authority may require evidence of proper installation, procedure, or use. The authority having jurisdiction may also refer to the listings or labeling practices of an organization that is concerned with product evaluations and is thus in a position to determine compliance with appropriate standards for the current production of listed items.

A.3.2.2 Authority Having Jurisdiction (AHJ). The phrase "authority having jurisdiction," or its acronym AHJ, is used in NFPA documents in a broad manner, since jurisdictions and approval agencies vary, as do their responsibilities. Where public safety is primary, the authority having jurisdiction may be a federal, state, local, or other regional department or individual such as a fire chief; fire marshal; chief of a fire prevention bureau, labor department, or health department; building official; electrical inspector; or others having statutory authority. For insurance purposes, an insurance inspection department, rating bureau, or other insurance company representative may be the authority having jurisdiction. In many circumstances, the property owner or his or her designated agent assumes the role of the authority having jurisdiction; at government installations, the commanding officer or departmental official may be the authority having jurisdiction.

A.3.2.4 Listed. The means for identifying listed equipment may vary for each organization concerned with product evaluation; some organizations do not recognize equipment as listed unless it is also labeled. The authority having jurisdiction should utilize the system employed by the listing organization to identify a listed product.

A.3.3.2 Bathroom. A room is still considered a bathroom if it contains just a toilet. Additionally, two bathrooms that are adjacent to each other are considered separate rooms or compartments.

A.3.3.7 Manufactured Home. Manufactured homes were formerly referred to as "mobile homes" or "trailer coaches."

A.3.3.8 Premixed Antifreeze Solution. Where a tank is used as the water supply for the sprinkler system, the tank is not permitted to be filled with antifreeze.

A.3.3.11 Shadow Area. Water is not required to fall on every square inch of floor space of the occupancy. This definition establishes a term that will be used to address the rules for acceptable dry spaces that occur when walls interfere with the sprinkler's spray pattern. Angled walls, wing walls, and slightly indented walls can disrupt water discharging from a sprinkler, which does not travel only in an absolute straight line, as if it were beams of light. Where small (typically triangular) shadowed areas are formed on the floor adjacent to the wall, these shadowed areas are purely on paper and do not take into account the dynamic variables of sprinkler discharge. In order to be acceptable, the shadow area needs to be within the coverage area of a sprinkler, meaning that water would discharge to the space directly if the structural or architectural feature was not there. The purpose of the shadow area is not to replace any existing obstruction requirements. Instead the shadow area concept has been added to the standard to provide clarity to specific situations in which walls form non-rectangular-shaped rooms as shown in Figure A.3.3.11.

A.3.3.13.3 Multipurpose Piping Sprinkler System. Examples of multipurpose piping systems are shown in Figure A.3.3.13.3(a), Figure A.3.3.13.3(b), and Figure A.3.3.13.3(c).

A.3.3.13.4 Network Sprinkler System. A network system is a type of multipurpose system that often uses ½ in. (15 mm) piping to serve both domestic and fire protection needs, providing an equivalent level of suppression capability as larger piping systems. To accomplish this protection, each sprinkler is supplied by water flowing to it from at least three separate paths. An example of a network system is shown in Figure A.3.3.13.3(c).

A.3.3.13.5 Passive Purge Sprinkler System. The domestic plumbing fixture should be on a remote portion of the system or the system should be designed as a loop so that water moves through a majority of the system when the fixture is used. This type of system is also called a "flow through system" in much of North America.

A.3.3.13.9 Stand-Alone Sprinkler System. Underground piping is permitted to serve domestic use as well as sprinkler system use, but once the split is made between systems, the piping serving fire sprinklers only serves the fire sprinklers.

A.3.3.15.2 Control Valve. System control valves should be of the indicating type, such as plug valves, ball valves, butterfly valves, or OS&Y gate valves.

Table A.1.2(a) Reported One- or Two-Family Home Structure Fires by Area of Origin: 2013–2017 Annual Averages

Area of Origin	Civilian Deaths	Civilian Percent	Fires	Percent	Injuries	Percent
Living room, family room, or den	540	24	10,100	4	760	10
Bedroom	500	23	18,300	7	1,460	20
Kitchen or cooking area	350	16	82,000	34	2,470	34
Other known area of origin	220	10	30,000	12	660	9
Unclassified function area	200	9	5,800	2	310	4
Unclassified structural area	70	3	4,500	2	90	1
Garage or vehicle storage area*	60	2	9,000	4	360	5
Exterior balcony or unenclosed porch	50	2	6,000	2	160	2
Unclassified area of origin	50	2	5,400	2	80	1
Substructure area or crawl space	40	2	4,200	2	120	2
Laundry room or area	30	1	8,000	3	220	3
Lavatory or bathroom	30	1	4,800	2	160	2
Attic or ceiling/roof assembly or concealed space	20	1	8,300	3	90	1
Wall assembly or concealed space	20	1	5,200	2	60	1
Courtyard, patio, terrace	20	1	3,900	2	90	1
Unclassified outside area	10	0	10,400	4	60	1
Exterior wall surface	10	0	8,400	3	100	1
Heating equipment room	10	1	4,100	2	80	1
Confined chimney or flue fire†	0	0	16,200	7	20	0
Total:	2,220	100	244,400	100	7,330	100

Source: NFIRS 5.0 and the NFPA fire experience survey (Published report: "Home Structure Fires: Supporting Tables," 2019, Table 10A).

Note: Sums might not equal totals due to rounding errors.

*Does not include fires with property use coded as residential garage.

†NFIRS 5.0 does not have a separate area of origin code for fires starting in chimneys. Any home fire with NFIRS incident type 114 — "Chimney of fire originating in and confined to a chimney or flue" is captured here.

A.4.4 A scaled drawing where required should show the following:

(1) Address (if known)
(2) Size and type of domestic line, including length to city connection
(3) Water meter size
(4) Current static water pressure
(5) Interior walls
(6) Model, manufacturer, temperature, orifice size, and spacing requirements of sprinklers
(7) Type of pipe
(8) Hanger spacing requirement per the pipe manufacturer
(9) Riser detail
(10) Installing contractor information
(11) Preliminary hydraulic calculations

A.5.1.1 Where fused sprinklers are replaced by the owner, fire department, or others, care should be taken to ensure that the replacement sprinkler has the same operating characteristics.

A.5.1.1.1 Where the sprinkler being removed from the system remains attached to the original fitting or welded outlet, the sprinkler should be permitted to be reinstalled provided care

Table A.1.2(b) Reported One- or Two-Family Home Structure Fires by Heat Source: 2013–2017 Annual Averages

Heat Source	Civilian Deaths	Civilian Percent	Fires	Percent	Injuries	Percent
Smoking materials	430	20	10,800	4	690	9
Radiated or conducted heat from operating equipment	350	16	39,400	16	1,570	21
Arcing	300	14	28,300	12	690	9
Unclassified heat and powered equipment	210	9	35,200	14	1,100	15
Unclassified heat source	170	8	19,900	8	400	5
Lighter	140	6	8,000	3	480	6
Other known heat source	140	6	15,400	6	380	5
Unclassified hot or smoldering object	110	5	16,900	7	330	5
Spark, ember, or flame from operating equipment	90	4	15,100	6	450	6
Hot ember or ash	80	4	20,500	8	300	4
Heat from direct flame or convection currents	60	3	10,700	4	240	3
Candle	60	3	6,000	2	480	7
Match	50	2	5,800	2	100	1
Unclassified heat spread from	20	1	4,100	2	50	1
Radiated heat from another fire	10	0	5	2	40	1
Lightning	10	0	3,800	2	30	0
Total:	2,220	100	2,444,000	100	7,330	100

Source: NFIRS 5.0 and the NFPA fire experience survey (Published report: "Home Structure Fires: Supporting Tables," 2019, Table 8A).
Note: Sums might not equal totals due to rounding errors.

has been taken to ensure the sprinkler has not been damaged. Flexible hose connections are considered a fitting.

A.5.2.2 For reference, the information in Table A.5.2.2(a) through Table A.5.2.2(d) is provided to assist in the determination of acceptable water availability.

A.5.2.2.2 In most installations, pressure increases due to temperature fluctuations or pressure surges do not cause the system pressure to exceed the pressure rating of the pipe. In situations where the system pressure has the potential to exceed the pipe pressure rating, installation of a relief valve should be considered. Where a relief valve is installed, consideration should be given to making sure that an adequate drain is available to handle the anticipated discharge.

A.5.2.3.2 Not all pipe or tube made to ASTM F442, *Standard Specification for Chlorinated Poly (Vinyl Chloride) (CPVC) Plastic Pipe (SDR–PR)*, as described in 5.2.3.2 is listed for fire sprinkler service. Listed pipe is identified by the logo of the listing agency.

All nonmetallic pipe and fitting materials can be damaged by contact with chemicals found in some construction products, such as thread sealants, leak detectors, firestops, insulation, spray foams, cutting oils, termiticides, insecticides, antifreeze, coupling lubes, communication cables, wires, flux, solder, mastic, PVC-coated floor clamps, pipe tapes, grease and cooking oils, rubber and plasticizers, antimicrobial coatings, and so forth. The chemical compatibility of such products with the particular pipe or fitting material must be verified prior to use. Otherwise, contact between the construction product and the pipe or fitting must be avoided.

Table A.1.2(c) Reported One- or Two-Family Home Structure Fires by Item First Ignited: 2013–2017 Annual Averages

Item First Ignited	Civilian Deaths	Civilian Percent	Fires	Percent	Injuries	Percent
Upholstered furniture	370	17	4,000	2	430	6
Other known item first ignited	280	12	36,900	15	940	13
Mattress or bedding	240	11	6,400	3	670	9
Flammable or combustible liquid or gases, piping or filter	190	8	11,300	5	750	10
Multiple items first ignited	150	7	5,400	2	250	3
Unclassified furniture, utensils	140	6	4,000	2	200	3
Structural member or framing	120	5	16,400	7	260	4
Clothing	120	6	5,100	2	310	4
Cooking materials, including food	120	5	53,600	22	1,720	23
Electrical wire or cable insulation	110	5	15,100	6	320	4
Unclassified item first ignited	100	5	15,200	6	270	4
Interior wall covering, excluding drapes	90	4	5,500	2	160	2
Unclassified structural component or finish	70	3	7,100	3	120	2
Exterior wall covering or finish	30	1	12,600	5	180	2
Appliance housing or casing	30	1	10,400	4	200	3
Cabinetry	30	1	3,900	2	170	2
Rubbish, trash, or waste	20	1	9,500	4	150	2
Unclassified organic materials	10	0	8,400	3	50	1
Household utensils	10	0	4,900	2	100	1
Insulation within structural area	10	0	4,800	2	40	1
Light vegetation, including grass	10	0	4,200	2	30	0
Total:	2,220	100	244,400	100	7,330	100

Source: NFIRS 5.0 and the NFPA fire experience survey (Published report: "Home Structure Fires: Supporting Tables," 2019, Table 11A).
Note: Sums might not equal totals due to rounding errors.

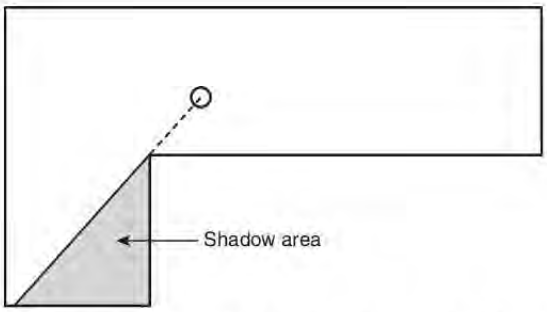

FIGURE A.3.3.11 Shadow Area Created by a Wall.

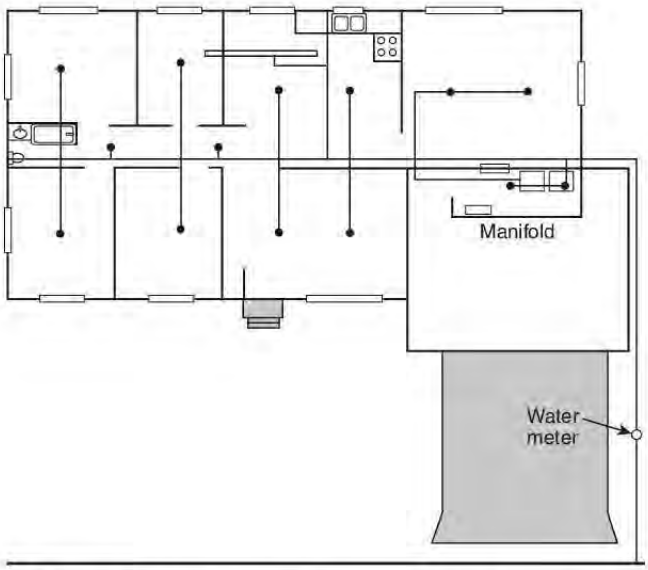

FIGURE A.3.3.13.3(a) Multipurpose Piping System (Tree System) — Example 1.

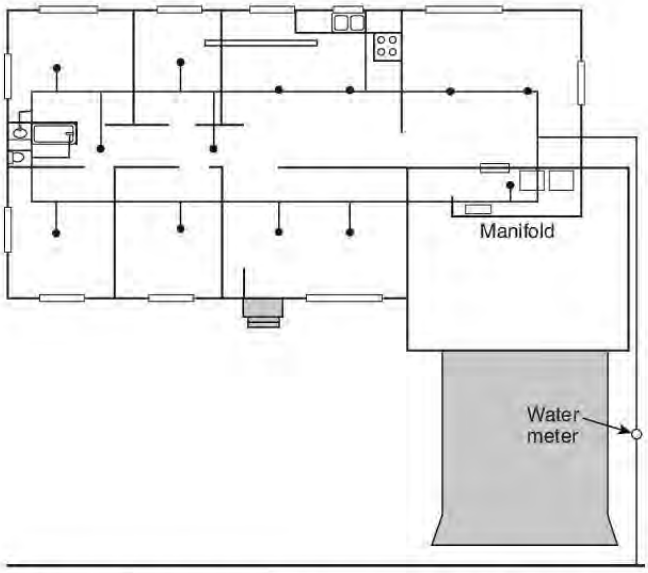

FIGURE A.3.3.13.3(b) Multipurpose Piping System (Looped System) — Example 2.

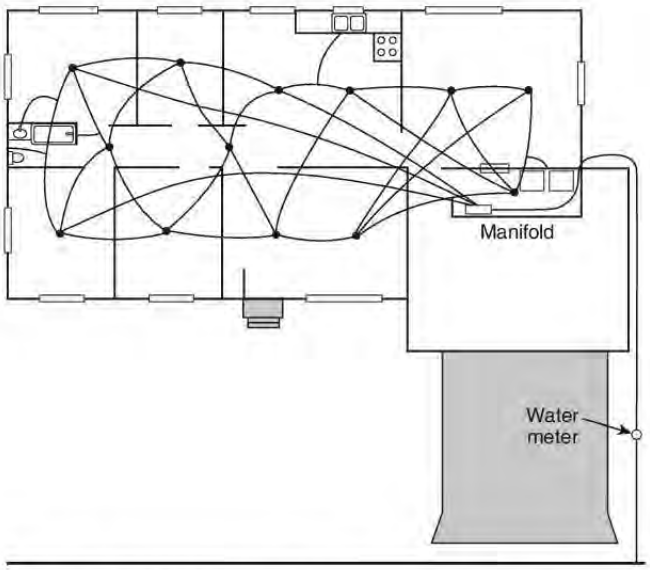

FIGURE A.3.3.13.3(c) Multipurpose Piping System — Example 3 (Network System).

Table A.5.2.2(a) SDR 13.5 IPS Pipe (CPVC)

Nominal Pipe Size		Average Outside Diameter		Average Inside Diameter	
in.	mm	in.	mm	in.	mm
¾	20	1.05	26.7	0.87	22.1
1	25	1.32	33.5	1.10	27.9
1¼	32	1.66	42.2	1.39	35.3
1½	40	1.90	48.3	1.60	40.6
2	50	2.38	60.5	2.00	50.8
2½	65	2.88	73.2	2.42	61.5
3	80	3.50	88.9	2.95	74.9

A.5.2.9.2 Compatible thread sealant or Teflon tape can be used in a CPVC sprinkler head adapter. The combination of the two cannot be used together. The manufacturer of the sprinkler head adapter installation instructions must be followed for each sprinkler head adapter used. Not all fittings made to ASTM F437, *Standard Specification for Threaded Chlorinated Poly(Vinyl Chloride) (CPVC) Plastic Pipe Fittings, Schedule 80*; ASTM F438, *Standard Specification for Socket-Type Chlorinated Poly(Vinyl Chloride) (CPVC) Plastic Pipe Fittings, Schedule 40*; and ASTM F439, *Standard Specification for Chlorinated Poly (Vinyl Chloride) (CPVC) Plastic Pipe Fittings, Schedule 80*, as described in 5.2.9.2 are listed for fire sprinkler service. Listed fittings are identified by the logo of the listing agency.

A.5.3 It is not the intent of this standard to require the use of NFPA 24 for any supply piping.

Table A.5.2.2(b) SDR 9 CTS Pipe (PEX)

Nominal Diameter		Outside Diameter		Wall		Inside Diameter	
in.	mm	in.*	mm	in.†	mm	in.	mm
⅜	9	0.50	12.7	0.07	1.8	0.36	9.1
½	15	0.63	15.9	0.07	1.8	0.49	12.3
¾	20	0.88	22.2	0.10	2.5	0.68	17.2
1	25	1.30	32.5	0.13	3.2	0.88	22.2
1¼	32	1.38	34.5	0.15	3.9	1.07	27.2
1½	40	1.63	41.2	0.18	4.6	1.26	32.1
2	50	2.13	54.0	0.24	6.0	1.65	42.0

*Average dimensions from ASTM F876, *Standard Specification for Crosslinked Polyethylene (PEX) Tubing.*
†Minimum wall thickness from ASTM F876.

Table A.5.2.2(c) Steel Pipe Dimensions

Nominal Pipe Size		Outside Diameter		Schedule 5				Schedule 10*				Schedule 30				Schedule 40			
				Inside Diameter		Wall Thickness		Inside Diameter		Wall Thickness		Inside Diameter		Wall Thickness		Inside Diameter		Wall Thickness	
in.	mm	in.	mm	in.	mm	in.	mm	in.	mm	in.	mm	in.	mm	in.	mm	in.	mm	in.	mm
½†	15	0.84	21.3	—	—	—	—	0.67	17.0	0.08	2.1	—	—	—	—	0.62	15.8	0.11	2.77
¾†	20	1.05	26.7	—	—	—	—	0.88	22.4	0.08	2.1	—	—	—	—	0.82	21.0	0.11	2.87
1	25	1.32	33.4	1.19	30.1	0.07	1.7	1.10	27.9	0.11	2.8	—	—	—	—	1.05	26.6	0.13	3.37
1¼	32	1.66	42.2	1.53	38.9	0.07	1.7	1.44	36.6	0.11	2.8	—	—	—	—	1.38	35.1	0.14	3.56
1½	40	1.90	48.3	1.77	45.0	0.07	1.7	1.68	42.7	0.11	2.8	—	—	—	—	1.61	40.9	0.15	3.68
2	50	2.38	60.3	2.25	57.0	0.07	1.7	2.16	54.8	0.11	2.8	—	—	—	—	2.07	52.5	0.15	3.91
2½	65	2.88	73.0	2.71	68.8	0.08	2.1	2.64	66.9	0.12	3.0	—	—	—	—	2.47	62.7	0.20	5.16
3	80	3.50	88.9	3.33	84.7	0.08	2.1	3.26	82.8	0.12	3.0	—	—	—	—	3.07	77.9	0.22	5.49

* Schedule 10 defined to 5 in. (127 mm) nominal pipe size by ASTM A135/A135M, *Standard Specification for Electric-Resistance-Welded Steel Pipe.*
† These values applicable when used in conjunction with 8.15.19.3 and 8.15.19.4 of NFPA 13.
[**13:**Table A.6.3.2]

Table A.5.2.2(d) Copper Tube Dimensions

Nominal Tube Size		Outside Diameter		Type K				Type L				Type M			
				Inside Diameter		Wall Thickness		Inside Diameter		Wall Thickness		Inside Diameter		Wall Thickness	
in.	mm	in.	mm	in.	mm	in.	mm	in.	mm	in.	mm	in.	mm	in.	mm
¾	20	0.88	22.2	0.75	18.9	0.07	1.7	0.79	19.9	0.05	1.1	0.81	20.6	0.03	0.8
1	25	1.13	28.6	1.00	25.3	0.07	1.7	1.03	26.0	0.05	1.3	1.06	26.8	0.04	0.9
1¼	32	1.38	34.9	1.25	31.6	0.07	1.7	1.27	32.1	0.06	1.4	1.29	32.8	0.04	1.1
1½	40	1.63	41.3	1.48	37.6	0.07	1.8	1.51	38.2	0.06	1.5	1.53	38.8	0.05	1.2
2	50	2.13	54.0	1.96	49.8	0.08	2.1	1.99	50.4	0.07	1.8	2.01	51.0	0.06	1.5
2½	65	2.63	66.7	2.44	61.8	0.10	2.4	2.47	62.6	0.08	2.0	2.50	63.4	0.07	1.7
3	80	3.13	79.4	2.91	73.8	0.11	2.8	2.95	74.8	0.09	2.3	2.98	75.7	0.07	1.8

[**13:**Table A.6.3.5]

A.6.2 The connection to city mains for fire protection is often subject to local regulation of metering and backflow prevention requirements. Preferred and acceptable water supply arrangements are shown in Figure A.6.2(a) through Figure A.6.2(e). Where it is necessary to use a meter between the city water main and the sprinkler system supply, an acceptable arrangement as shown in Figure A.6.2(c) and Figure A.6.2(d) can be used. Under these circumstances, the flow characteristics of the meter are to be included in the hydraulic calculation of the system *[see Table 10.4.4(a)]*. Where a tank is used for both domestic and fire protection purposes, a low water alarm that actuates when the water level falls below 110 percent of the minimum quantity specified in 6.1.2 should be provided.

The effect of pressure-reducing valves on the system should be considered in the hydraulic calculation procedures.

Figure A.6.2(a), Figure A.6.2(c), or Figure A.6.2(d) are acceptable methods for getting the water supply into the unit for a stand-alone sprinkler system (one that does not also provide direct connections to the cold water fixtures) because the common supply pipe for the domestic system and the sprinkler system between the water supply and the dwelling unit has a single control valve that shuts the sprinkler system, which helps to ensure that people who have running water to their domestic fixtures also have fire protection. This serves as a form of supervision for the control valve and can be used to make sure that the valve stays open in place of other, more expensive options such as tamper switches with a monitoring service.

Some water utilities choose to install separate taps and supply pipes from the water supply to the dwelling unit for fire sprinkler systems as shown in Figure A.6.2(d), due to the preference to not shut off water to piping that includes fire supply as well as domestic water supply. While these types of arrangements are acceptable, they might not be cost efficient and should be evaluated due to the extra cost burden this places on the building owner.

Single services should be acceptable as this standard is a life safety standard. This means that the purpose of the standard is to protect human life and not to necessarily protect property. In the event that the domestic water supply is shut off, plumbing code dictates that the home is uninhabitable and thus should be vacated. If there are no occupants within the home then there are no life safety concerns.

Additionally, having a single service connection provides some assurance that the water supply to the sprinkler system is operational.

A.6.2.3 In a situation where a two-family dwelling or townhouse has a common water supply, there must be a way to isolate the sprinkler system in one unit without having to enter another unit. Where each unit has its own shutoff valve and one unit suffers a fire event and cannot be occupied, the damaged unit can be isolated and other units can remain occupied because they have functioning sprinkler systems.

A.6.2.3.3 Well pumps are an economical way to provide a water supply source in rural areas without a municipal water supply. Rather than having a pump and tank assembly as described in 6.2.1 and 6.2.2, which typically takes up floor space in the dwelling or home and requires a separate ac power source among other things, the well pump can be upsized to accommodate the sprinkler demand at considerably less cost.

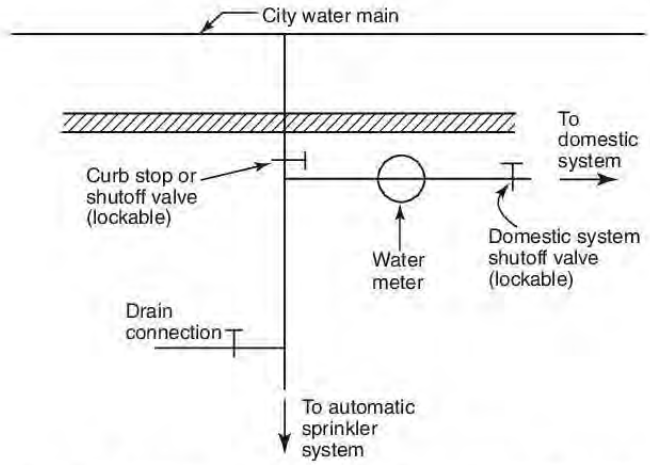

FIGURE A.6.2(a) Minimum Requirements for a Stand-Alone System.

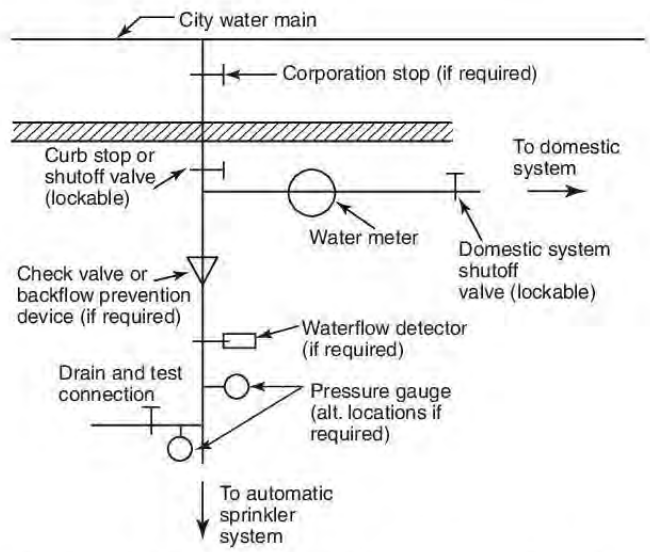

FIGURE A.6.2(b) Acceptable Arrangement for Stand-Alone Piping Systems — Option 1.

A.6.3 Multipurpose piping systems consist of a single piping system within a residential occupancy that is intended to serve both domestic and fire protection needs. Basic forms of this system are shown in Figure A.6.3(a), Figure A.6.3(b), Figure A.6.3(c), and Figure A.6.3(d). A network system, as defined in 3.3.13.4, is a type of multipurpose system that utilizes a common piping system supplying domestic fixtures and fire sprinklers where each sprinkler is supplied by a minimum of three separate paths. In dwellings where long-term use of lawn sprinklers is common, provision should be made for such usage.

A.7.2.1 In the case of a multipurpose system, a plumbing fixture on the system side of the main control valve can meet the requirement for a drain.

A.7.2.4 These connections should be installed so that the valve can be opened fully and for a sufficient time period to ensure a proper test without causing water damage. The test connection

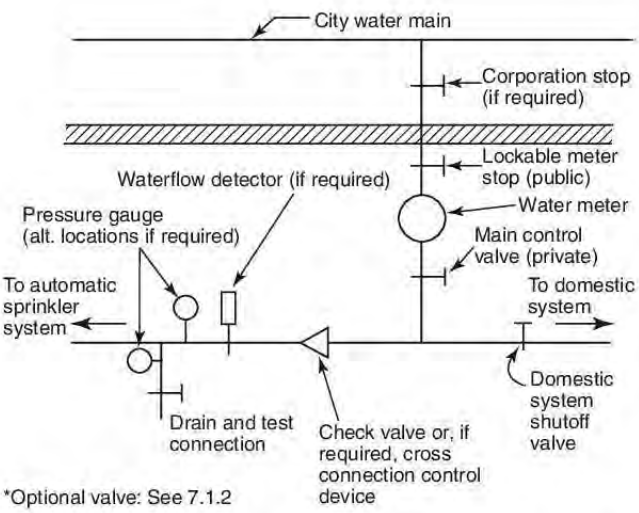

FIGURE A.6.2(c) Acceptable Arrangement for Stand-Alone Piping System — Option 2.

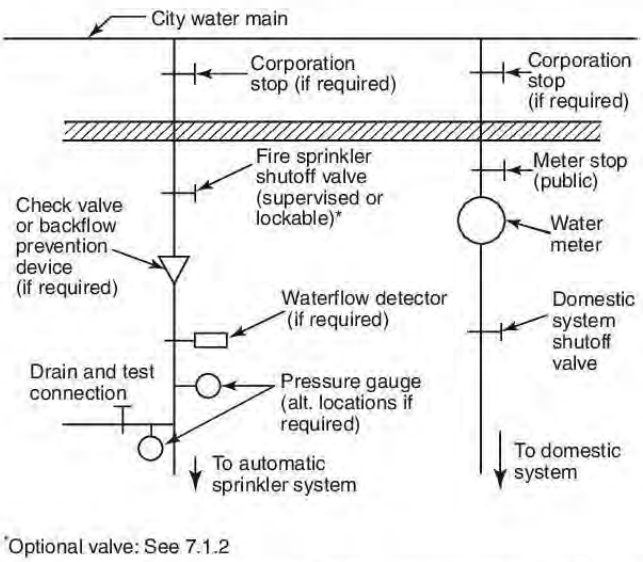

FIGURE A.6.2(d) Acceptable Arrangement for Stand-Alone Piping Systems — Option 3.

should be designed and sized to verify the sufficiency of the water supply and alarm mechanisms.

A.7.2.6 Where the pressure-reducing or pressure-regulating valve also serves the domestic water supply, the domestic fixtures in the home serve as the connection for which the device can be tested, but a gauge is still needed downstream to verify valve performance and function.

A.7.4.4 The reaction forces caused by the flow of water through the sprinkler could result in displacement of the sprinkler, thereby adversely affecting sprinkler discharge.

A.7.4.5 Wood attached or fastened to the structure used as part of a trapeze hanger is considered an extension of the structure and is considered acceptable to hang sprinkler piping.

A.7.5.5 Corrosion-resistant sprinklers should be considered for use in steam rooms.

A.7.5.6.3 Care should be taken in positioning sprinklers in bathrooms near exhaust fan units. Some exhaust fan units have heaters built in to warm up the bathroom, and these units have the potential to activate sprinklers. Combination exhaust fan and heater units should be treated as wall-mounted diffusers for the purposes of using Table 7.5.6.3.

A.7.5.6.3(3) See Figure A.7.5.6.3(3)(a), Figure A.7.5.6.3(3)(b), Figure A.7.5.6.3(3)(c), and Figure A.7.5.6.3(3)(d).

A.7.5.7 Decorative painting of a residential sprinkler is not to be confused with the temperature identification colors as specified in 6.2.5 of NFPA 13.

A.7.6 The waterflow detection device and the audible alarm device do not have to be listed. The local waterflow alarm is intended to be a single alarm audible from the outside of the building. It can be mounted on the outside of the home or within the building close to the outside. This should not limit its use to prevent interior or remote notification. Interconnection with a smoke alarm or remote monitoring might improve notification, but is considered too costly to mandate for every system installed in accordance with this standard. It is not the intent of this standard to require central station monitoring or a fire alarm system.

An exterior alarm can be of benefit in areas where a neighbor could alert the fire department or to enhance the ability for an assisted rescue by a passerby.

A waterflow test is normally conducted using the system drain. Figure A.6.2(a), Figure A.6.2(b), and Figure A.6.2(c) show examples of this arrangement.

A.8.1.3.1.2 See A.10.2.4.

For situations not meeting the conditions of 8.1.3.1.1, sprinkler coverage should be determined in consultation with the manufacturer and the authority having jurisdiction as appropriate for the conditions.

A.8.2.1.2 Concealed sprinklers should not be considered flush-type sprinklers.

A.8.2.5 The objective is to position sprinklers so that the response time and discharge are not unduly affected by obstructions such as ceiling slope, beams, light fixtures, or ceiling fans. The rules in this section, while different from the obstruction rules of NFPA 13, provide a reasonable level of life safety while maintaining the philosophy of keeping this standard relatively simple to apply and enforce.

Fire testing has indicated the need to wet walls in the area protected by residential sprinklers at a level closer to the ceiling than that accomplished by standard sprinkler distribution. Where beams, light fixtures, sloped ceilings, and other obstructions occur, additional residential sprinklers are necessary to achieve proper response and distribution. In addition, for sloped ceilings, higher flow rates could be needed. Guidance should be obtained from the manufacturer.

A series of 33 full-scale tests were conducted in a test room with a floor area of 12 ft × 24 ft (3.7 m × 7.2 m) to determine the effect of cathedral (sloped) and beamed ceiling construction, and combinations of both, on fast-response residential sprinkler performance. The testing was performed using one

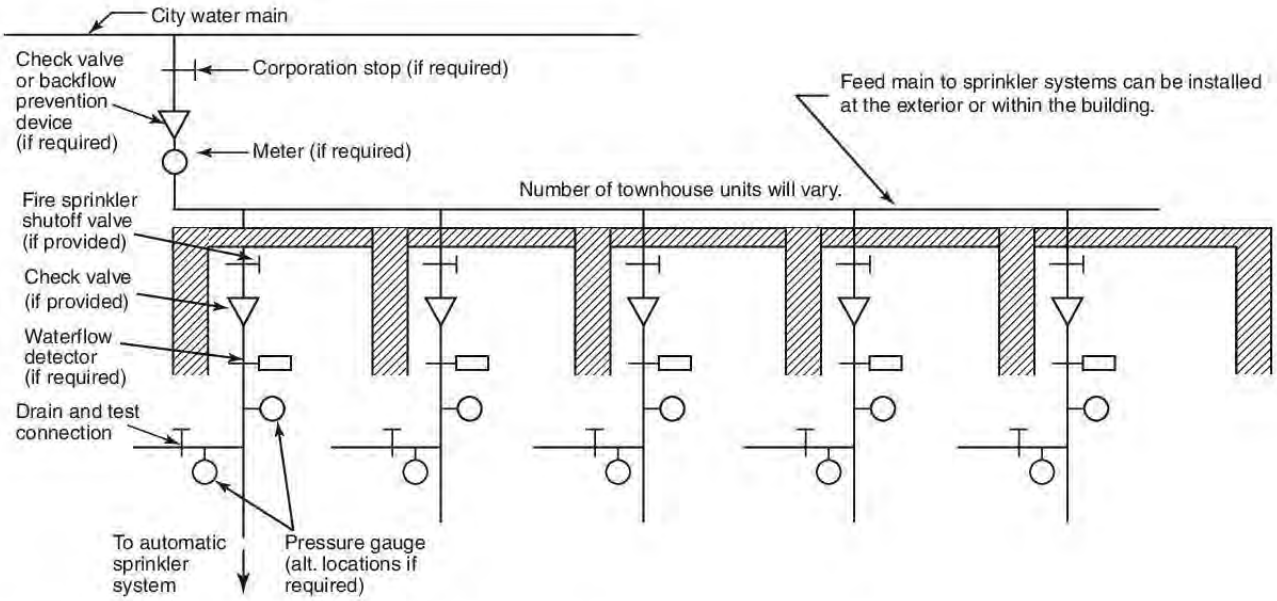

FIGURE A.6.2(e) Acceptable Arrangement for Townhouse Stand-Alone Piping Systems.

pendent-type residential sprinkler model, two ceiling slopes (0 degrees and 14 degrees), and two beam configurations on a single enclosure size. In order to judge the effectiveness of sprinklers in controlling fires, two baseline tests, in which the ceiling was smooth and horizontal, were conducted with the pendent sprinklers installed and with a total water supply of 26 gpm (100 L/min) as required by this standard. The results of the baseline tests were compared with tests in which the ceiling was beamed or sloped, or both, and two pendent sprinklers were installed with the same water supply. Under the limited conditions used for testing, the comparison indicates that sloped or beamed ceilings, or a combination of both, represent a serious challenge to the fire protection afforded by fast-response residential sprinklers. However, further tests with beamed ceilings indicated that fire control equivalent to that obtained in the baseline tests can be obtained where one sprinkler is centered in each bay formed by the beams and a total water supply of 36 gpm (135 L/min) is available. Fire control equivalent to that obtained in the baseline tests was obtained for the smooth, sloped ceiling tests where three sprinklers were installed with a total water supply of 54 gpm (205 L/min). In a single smoldering-started fire test, the fire was suppressed.

Where obstruction criteria established by this standard are followed, sprinkler spray patterns will not necessarily get water to every square foot of space within a room. As such, a sprinkler in a room with acceptable obstructions as outlined in this standard might not be capable of passing the fire test (specified by UL 1626, *Residential Sprinklers for Fire-Protection Service*, and other similar laboratory standards) if the fire is started in one of these dry areas. This occurrence is not to be interpreted as a failure of the sprinkler. The laboratory fire tests are sufficiently challenging to the sprinkler without additional obstructions as a safety factor to account for the variables that actually occur in dwellings, including acceptable obstructions to spray patterns.

The rules on 8.2.5.1 and 8.2.5.2 were developed from a testing series conducted by the National Fire Sprinkler Association and The Viking Corporation that included fire modeling, sprinkler response tests, sprinkler distribution tests, and full-

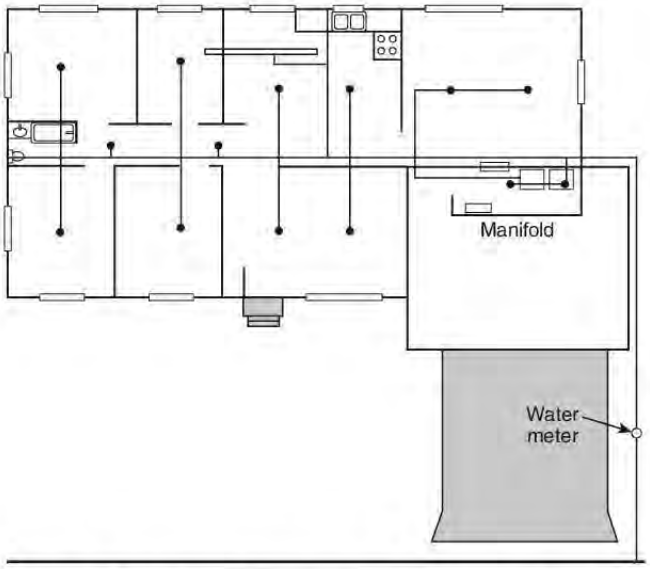

FIGURE A.6.3(a) Multipurpose Piping System (Tree System) — Example 1.

scale fire tests (Valentine and Isman, *Interaction of Residential Sprinklers, Ceiling Fans and Similar Obstructions*). This test series, along with additional industry experience, shows that a difference exists between obstructions that are tight to the ceiling and obstructions that hang down from the ceiling, allowing spray over the top. Residential sprinklers require high wall wetting, which means that they tend to spray over obstructions that hang down from the ceiling. The test series showed that the fan blades were not significant obstructions and that as long as the sprinkler was far enough from the fan motor housing (measured from the center of the housing), the sprinkler could control a fire on the other side of the fan in a small room. In larger rooms, the sprinkler will need to be augmented

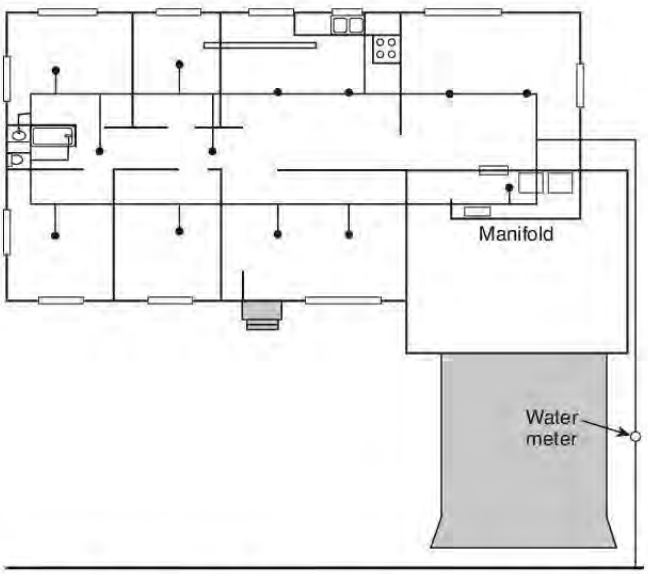

FIGURE A.6.3(b) Multipurpose Piping System (Looped System) — Example 2.

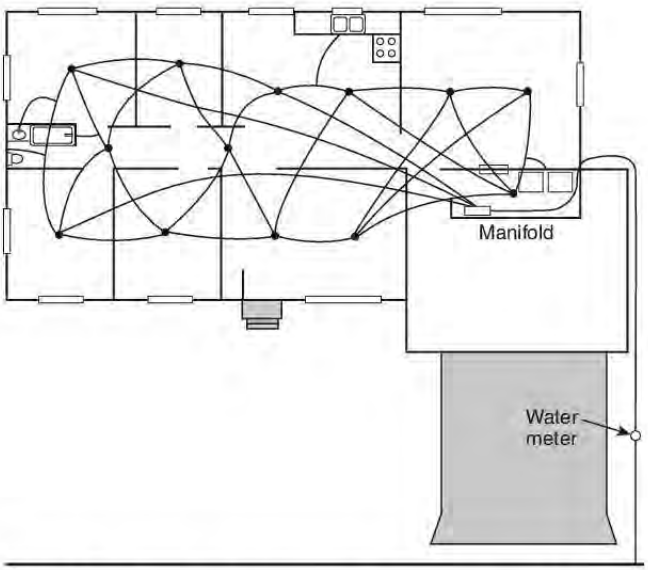

FIGURE A.6.3(c) Multipurpose Piping System — Example 3 (Network System).

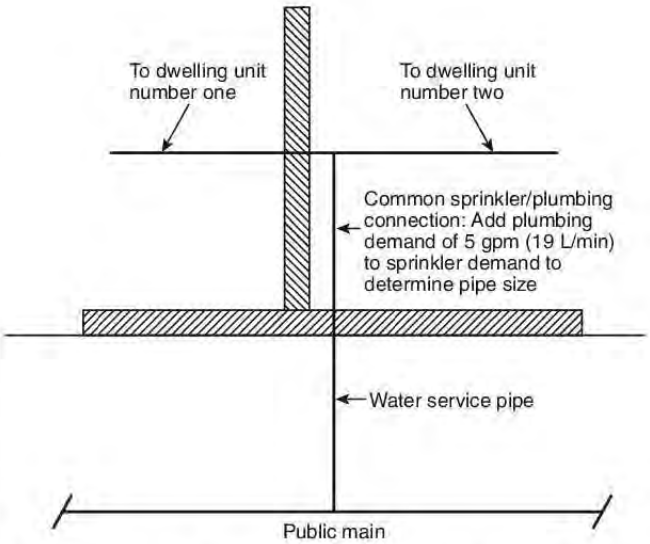

FIGURE A.6.3(d) Common Water Supply Connection Serving More Than One Dwelling Unit.

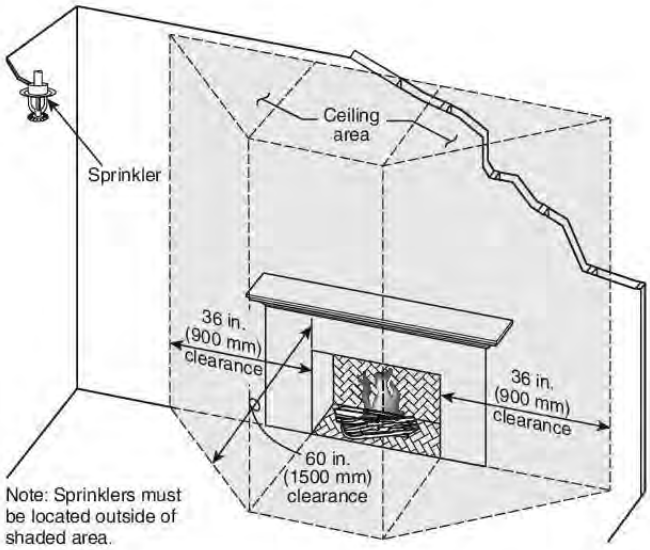

FIGURE A.7.5.6.3(3)(a) Recessed Fireplace — Ordinary Temperature Sprinkler Location.

by additional sprinklers on the other side of the fan. The test series showed that the fan on low or medium speed did not make a significant difference in sprinkler performance. On high speed (pushing air down), the fan did impact sprinkler performance, but fire control was still achieved in small rooms. In larger rooms, it is expected that additional sprinklers would be installed. The test series also showed that the fan blowing down was more significant than the fan pulling air up.

The rules in 8.2.5.7 were developed from years of experience with obstruction rules and an additional test series conducted by the National Fire Sprinkler Association with the help of Tyco International (Valentine and Isman, *Kitchen Cabinets and Residential Sprinklers*), which included fire modeling, distribution tests, and full-scale fire tests. The test series showed that pendent sprinklers definitely provide protection for kitchens, even for fires that start under the cabinets. The information in the series was less than definitive for sidewall sprinklers, but distribution data show that sprinklers in the positions in this standard provide adequate water distribution in front of the cabinets and that sidewall sprinklers should be able to control a fire that starts under the cabinets. When protecting kitchens or similar rooms with cabinets, the pendent sprinkler should be the first option. If pendent sprinklers cannot be installed, the next best option is a sidewall sprinkler on the opposite wall from the cabinets, spraying in the direction of the cabinets. The third best option is the sidewall sprinkler on the same wall as the cabinets on a soffit flush with the face of the cabinet. The last option should be putting sprinklers on the wall back behind

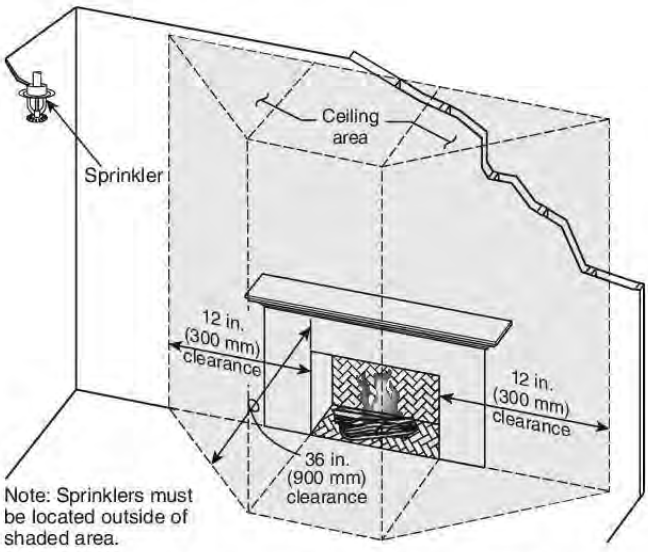

FIGURE A.7.5.6.3(3)(b) Recessed Fireplace — Intermediate Temperature Sprinkler Location.

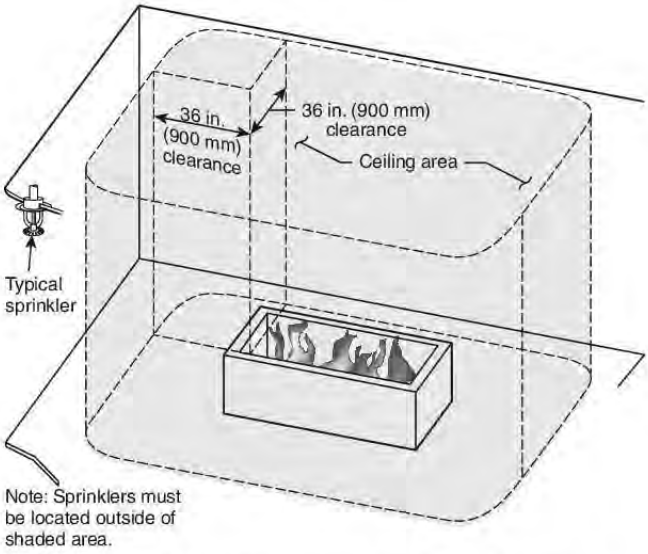

FIGURE A.7.5.6.3(3)(c) Open Fireplace — Ordinary Temperature Sprinkler Location.

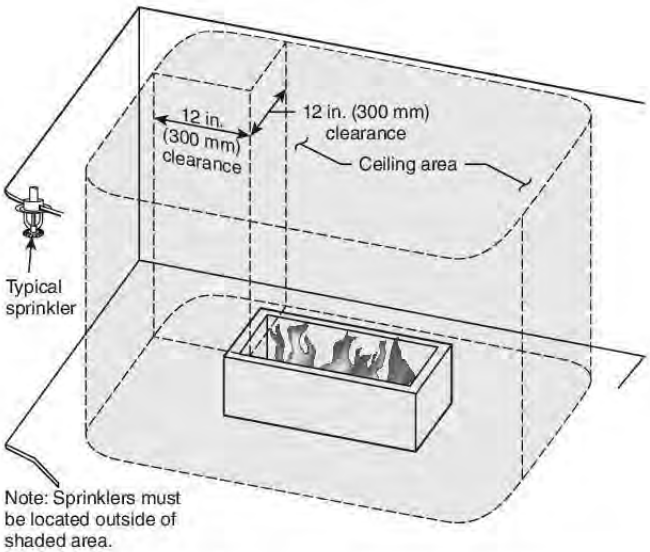

FIGURE A.7.5.6.3(3)(d) Open Fireplace — Intermediate Temperature Sprinkler Location.

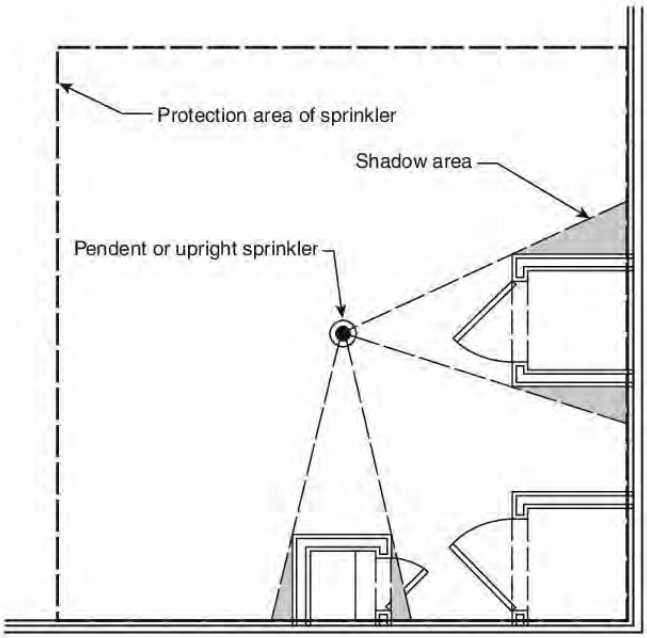

FIGURE A.8.2.5.7(a) Example of Shadow Areas (SSU/SSP).

the face of the cabinet because this location is subject to being blocked by items placed on top of the cabinets. It is not the intent of the committee to require sprinklers to be installed under kitchen cabinets.

A.8.2.5.7 Corridors being protected with sidewall sprinklers frequently have small areas behind the sprinklers called shadow areas that are inset for a doorway. Even though these shadow areas are slightly behind the sprinklers, it is not the intent of this standard to require additional sprinkler protection in these doorways.

Examples of shadow areas are provided in Figure A.8.2.5.7(a) and Figure A.8.2.5.7(b). The obstruction shown in Figure A.8.2.5.7(a) is a vertical obstruction in a room similar to a column. Sprinkler response and water distribution tests have been conducted on such obstructions and the data shows that the size of the obstruction as well as the size of the compartment are critical variables to sprinkler response. A larger shadow area can be acceptable in a smaller compartment. The obstruction shown in Figure A.8.2.5.7(b) is a bump out of a wall. Sprinkler response and water distribution tests have shown that this type of obstruction is not a problem.

A.8.2.6 Dry sprinklers must be of sufficient length to avoid freezing of the water-filled pipes due to conduction along the barrel. The values of exposed barrel length in Table 8.2.6.1(a) and Table 8.2.6.1(b) have been developed using an assumption of a properly sealed penetration and an assumed maximum

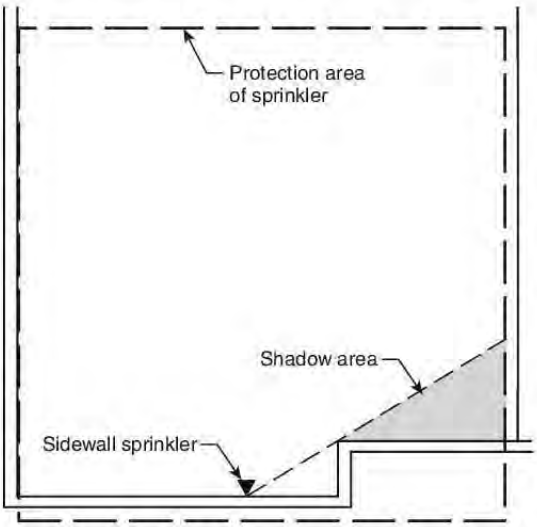

FIGURE A.8.2.5.7(b) Example of Shadow Areas (HSW).

wind velocity on the exposed sprinkler of 30 mph (48 km/h). Where higher wind velocity is expected, longer exposed barrel lengths will help avoid freezing of the wet piping. The total length of the barrel of the dry sprinkler must be longer than the values shown in Table 8.2.6.1(a) and Table 8.2.6.1(b) because the length shown in the tables is the minimum length of the barrel that needs to be exposed to the warmer ambient temperature in the heated space. See Figure A.8.2.6(a) for examples of where to measure the exposed barrel length for a sidewall sprinkler penetrating an exterior wall and Figure A.8.2.6(b) for an example of where to measure the exposed barrel length for a pendent sprinkler penetrating a ceiling or top of an insulated structure.

A.8.3.4 Although this standard does not require garages to be sprinklered, some authorities having jurisdiction take it upon themselves to add this requirement locally. In such circumstances, residential or quick-response sprinklers with a two-sprinkler design in the garage with the same piping used in the rest of the dwelling can be used. It is recognized that residential sprinklers have not been tested specifically for fires in garages, but field experience has shown that the sprinklers

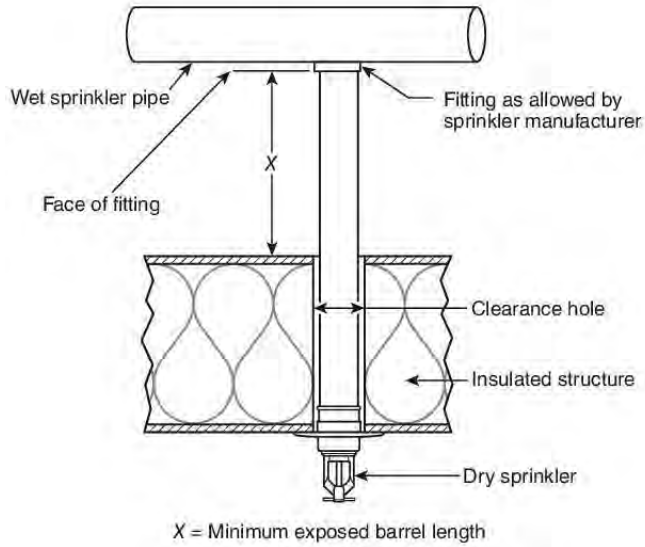

X is measured from the face of the sprinkler fitting to the inside surface of the exterior wall or insulation — whichever is closer to the fitting.

FIGURE A.8.2.6(b) Dry Pendent Sprinkler Through Ceiling or Top of Insulated Structure.

help to alert occupants to the fact that there is a fire, to reduce the possibility of flashover, and to improve the chances for occupants to escape.

Residential sprinklers and quick-response sprinklers at 0.05 gpm/ft^2 (2.04 L/min/m^2) densities have not been tested for use in garages. However, field experience has shown that they will activate, sound an alarm, and provide water distribution that will assist in controlling a fire.

A.8.3.5.1.2 Where a chimney or flue from fuel-fired equipment passes through a concealed space, it is not required to locate a sprinkler in this concealed space.

A.8.3.6 An example of such a space is a mudroom typically found in colder climates.

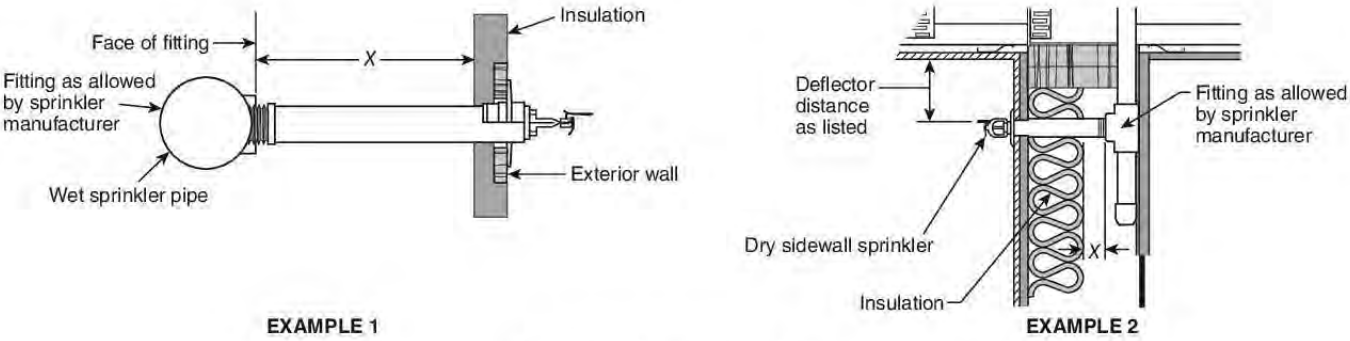

X = Minimum exposed barrel length

X is measured from the face of the sprinkler fitting to the inside surface of the exterior wall or insulation — whichever is closer to the fitting.

FIGURE A.8.2.6(a) Dry Sidewall Sprinkler Through Wall.

A.8.3.7(3) It is common to have combustible crown molding as decoration.

A.9.1.1 In areas subject to freezing, care should be taken in unheated attic spaces to cover sprinkler piping completely with insulation. Installation should follow the guidelines of the insulation manufacturer. Figure A.9.1.1(a) through A.9.1.1(f) show several methods that can be considered. These are for illustrative purposes only. Consultation with the general contractor and/or owner is recommended to ensure proper methods and materials are used to make sure 40°F (4°C) will be maintained.

The Fire Protection Research Foundation completed a research project ("Sprinkler Insulation: A Literature Review," July 2011) on the use of insulation to protect sprinkler pipe from freezing that can be downloaded for free from their website.

A.9.1.2.1(4) Where listed heat tracing is used on CPVC piping, it should be compatible with the CPVC piping.

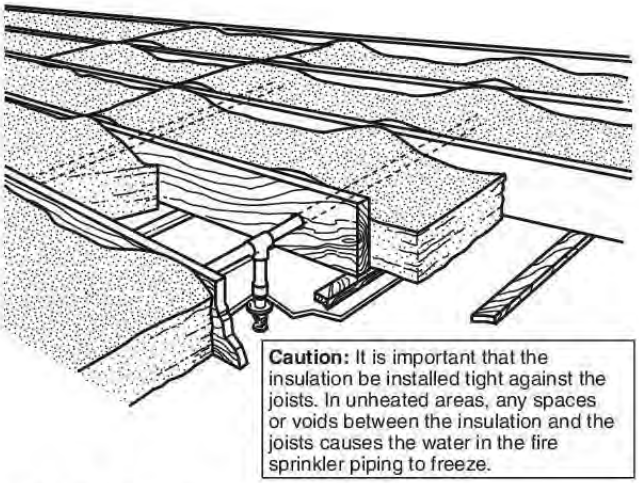

FIGURE A.9.1.1(a) Insulation Recommendations — Arrangement 1.

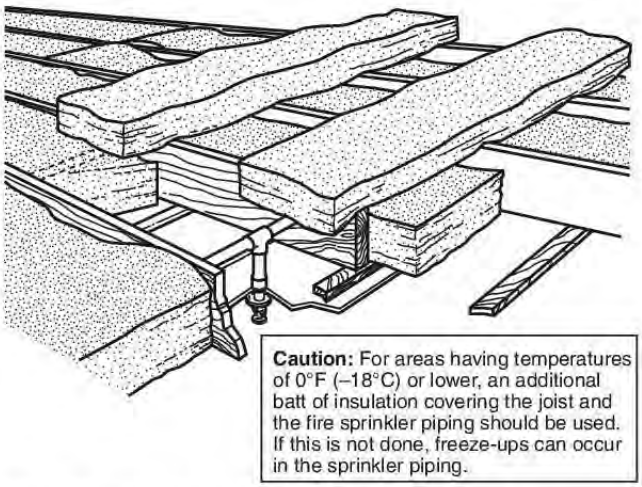

FIGURE A.9.1.1(b) Insulation Recommendations — Arrangement 2.

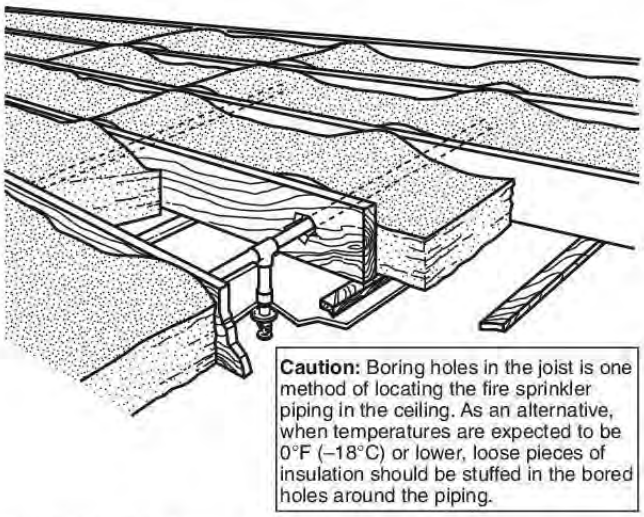

FIGURE A.9.1.1(c) Insulation Recommendations — Arrangement 3.

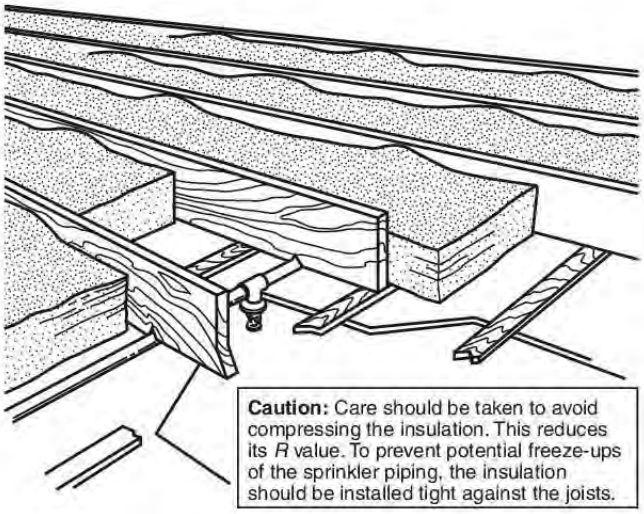

FIGURE A.9.1.1(d) Insulation Recommendations — Arrangement 4.

A.9.1.2.2 The internal temperature and duration of exposure that water filled piping could be subjected to, under freezing conditions, in an unconditioned space should be carefully considered and approved by the AHJ.

Dependable sources of information on historic temperatures include the following:

(1) National Oceanic and Atmospheric Administration — National Climatic Data Center
(2) National Weather Service
(3) Plant Hardiness Zone Maps (See https://planthardiness.ars.usda.gov)
(4) American Society of Heating, Refrigerating and Air-Conditioning Engineers (ASHRAE)
(5) Other approved sources

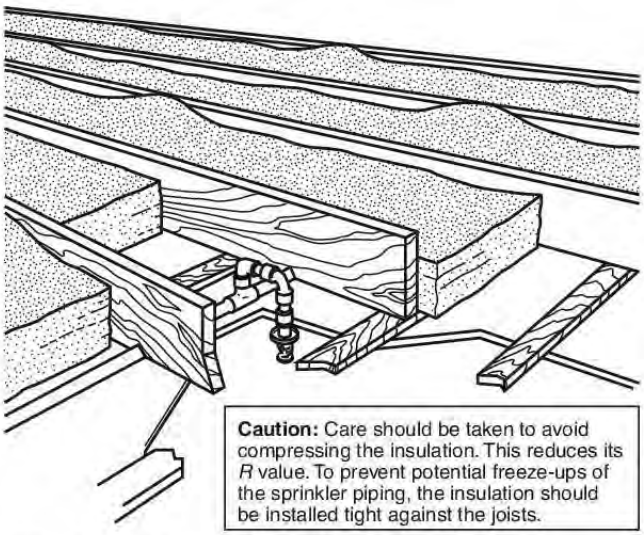

FIGURE A.9.1.1(e) Insulation Recommendations — Arrangement 5.

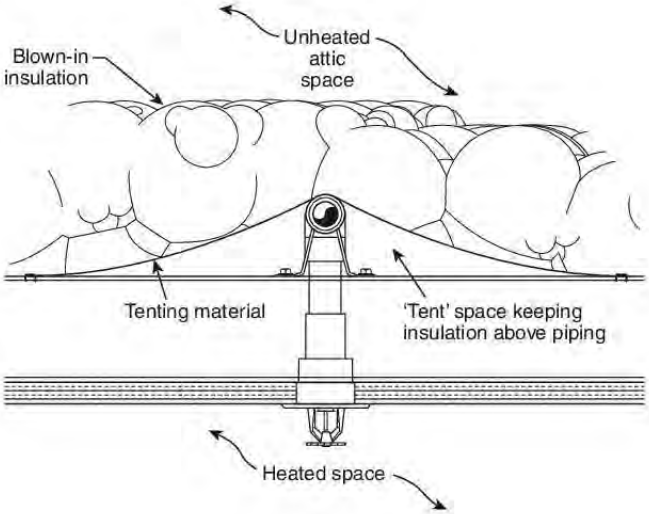

FIGURE A.9.1.1(f) Insulation Recommendations — Arrangement 6.

A.9.2 Where protection of pipes from freezing is a concern, options other than antifreeze are available. Such alternatives include running the piping in warm spaces, tenting insulation over pipe, dry pipe systems, and preaction systems.

A.9.2.1 Antifreeze solutions can be used for maintaining automatic sprinkler protection in small, unheated areas. Antifreeze solutions are recommended only for systems not exceeding 40 gal (150 L).

Because of the cost of refilling the system or replenishing small leaks, small, dry valves should be used where more than 40 gal (150 L) are to be supplied.

Propylene glycol or other suitable material can be used as a substitute for priming water to prevent evaporation of the priming fluid and thus reduce ice formation within the system.

A.9.2.2 Listed nonmetallic sprinkler pipe and fittings should be protected from freezing with an antifreeze solution that is compatible with the nonmetallic material. Laboratory testing shows that glycol-based antifreeze solutions present a chemical environment detrimental to nonmetallic pipe.

A.9.2.2.2 Examples of specific areas might include piping installed in an exterior wall or an unheated concealed space above a cathedral ceiling that cannot be protected with insulation or heat tracing. Premixed solutions of glycerine and propylene glycol should be used only where other freeze protection options are not practical. The specific areas protected by premixed glycerine and propylene glycol shall be limited to the greatest extent possible.

Propylene glycol and glycerine antifreeze solutions discharged from sprinklers have the potential to ignite under certain conditions. Research testing has indicated that several variables can influence the potential for large-scale ignition of the antifreeze solution discharged from a sprinkler. These variables include, but are not limited to, the concentration of antifreeze solution, sprinkler discharge characteristics, the inlet pressure at the sprinkler, the location of the fire relative to the sprinkler, and the size of the fire at the time of sprinkler discharge. Research testing also indicates that propylene glycol or glycerine solutions can be used successfully with certain other combinations of these same variables. Given the need for additional testing to further define acceptable versus unacceptable scenarios, the use of propylene glycol and glycerine antifreeze solutions should be considered only when other sprinkler system design alternatives are not practical. If these solutions are used, all relevant data and information should be carefully reviewed and considered in the sprinkler system. The following is a list of research reports that have been issued by the Fire Protection Research Foundation related to the use of antifreeze in sprinkler systems:

(1) *Antifreeze Systems in Home Fire Sprinkler Systems — Literature Review and Research Plan*
(2) *Antifreeze Systems in Home Fire Sprinkler Systems — Phase II Final Report*
(3) *Antifreeze Solutions Supplied through Spray Sprinklers — Interim Report*

Table A.9.2.2.2 provides an overview of the testing.

A.9.2.2.2.1 The documentation should substantiate that the proposed use of premixed glycerine and propylene glycol antifreeze solutions is consistent with the FPRF testing for the specific installation parameters.

A.9.2.2.3 The specific gravity for any liquid can be found by taking the density of the liquid at a specific temperature and dividing it by the density of water at that same temperature. The densities of propylene glycol and glycerine can be found for a wide range of temperatures in Figure A.9.2.3.2(a) and Figure A.9.2.3.2(b).

A.9.2.3 Many antifreeze solutions are heavier than water. At the point of contact (interface), provisions are required by 9.2.3 to prevent the diffusion of water into unheated areas.

To avoid leakage, the quality of materials and workmanship should be superior, the threads should be clean and sharp, and the joints should be tight. Only metal-faced valves should be used.

Table A.9.2.2.2 FPRF Antifreeze Testing Summary

Topic	Information
Scope of sprinklers tested	The following sprinklers were used during the residential sprinkler research program described in *Antifreeze Systems in Home Fire Sprinkler Systems — Phase II Final Report*: (1) Residential pendent style having nominal K-factors of 3.1, 4.9, and 7.4 gpm/psi (44, 70, and 100 L/min/bar-$^{1/2}$) (2) Residential concealed pendent style having a nominal K-factor of 4.9 gpm/psi$^{1/2}$ (70 L/min/bar-$^{1/2}$) (3) Residential sidewall style having nominal K-factors of 4.2 and 5.5 gpm/psi$^{1/2}$ (60 and 80 L/min/bar-$^{1/2}$) The following sprinklers were used during the spray sprinkler research program described in *Antifreeze Solutions Supplied through Spray Sprinklers — Interim Report*: (1) Residential pendent style having a nominal K-factor of 3.1 gpm/psi$^{1/2}$ (44 L/min/bar-$^{1/2}$) (2) Standard spray pendent style having nominal K-factors of 2.8, 4.2, 5.6, and 8.0 gpm/psi$^{1/2}$ (40, 60, and 80 L/min/bar-$^{1/2}$) (3) Standard spray concealed pendent style having a nominal K-factor of 5.6 gpm/psi$^{1/2}$ (80 L/min/bar-$^{1/2}$) (4) Standard spray upright style having a nominal K-factor of 5.6 gpm/psi$^{1/2}$ (80 L/min/bar-$^{1/2}$) (5) Standard spray extended coverage pendent style having a nominal K-factor of 5.6 gpm/psi$^{1/2}$ (80 L/min/bar-$^{1/2}$)
Antifreeze solution concentration	**<50% glycerine and <40% propylene glycol antifreeze solutions:** Solutions were not tested. **50% glycerine and 40% propylene glycol antifreeze solutions:** Large-scale ignition of the sprinkler spray did not occur in tests with sprinkler discharge onto a fire having a nominal heat release rate (HRR) of 1.4 MW. Large-scale ignition of the sprinkler spray occurred in multiple tests with sprinkler discharge onto a fire having a nominal HRR of 3.0 MW. **55% glycerine and 45% propylene glycol antifreeze solutions:** Large-scale ignition of the sprinkler spray occurred in tests with sprinkler discharge onto a fire having a nominal HRR of 1.4 MW. **>55% glycerine and >45% propylene glycol antifreeze solutions:** Large-scale ignition of the sprinkler spray occurred in tests with sprinkler discharge onto a fire having an HRR <500 kW. **70% glycerine and 60% propylene glycol antifreeze solutions:** Maximum antifreeze solution concentrations were tested.
Sprinkler inlet pressure	Large-scale ignition of the sprinkler discharge spray was not observed when the sprinkler inlet pressure was ≤50 psi (3.4 bar) for tests using 50% glycerine or 40% propylene glycol.
Ceiling height	When 50% glycerine and 40% propylene glycol antifreeze solutions were discharged onto fires having an HRR of 1.4 MW, no large-scale ignition of the sprinkler spray was observed with ceiling heights up to 20 ft (6.1 m). When 50% glycerine and 40% propylene glycol antifreeze solutions were discharged onto fires having an HRR of 3.0 MW, large-scale ignition of the sprinkler spray was observed at a ceiling height of 20 ft (6.1 m).
Fire control	The test results described in *Antifreeze Systems in Home Fire Sprinkler Systems — Phase II Final Report* and *Antifreeze Solutions Supplied through Spray Sprinklers — Interim Report* indicated that discharging glycerine and propylene glycol antifreeze solutions onto a fire can temporarily increase the fire size until water is discharged. As a part of the residential sprinkler research described in *Antifreeze Systems in Home Fire Sprinkler Systems — Phase II Final Report*, tests were conducted to evaluate the effectiveness of residential sprinklers to control fires involving furniture and simulated furniture. The results of those tests indicated that 50% glycerine and 40% propylene glycol antifreeze solutions demonstrated the ability to control the furniture-type fires in a manner similar to water. For standard spray-type sprinklers, no tests were conducted to investigate the ability of those sprinklers to control the types and sizes of fires they are intended to protect.

A.9.2.3.2 One formula for sizing the chamber is as follows, although other methods also exist:

[A.9.2.3.2a]

$$\Delta L = S_V \left(\frac{D_L}{D_H} - 1 \right)$$

where:

ΔL = change in antifreeze solution volume (gal) due to thermal expansion

S_V = volume (gal) of antifreeze system, not including the expansion chamber

D_L = density (g/mL) of antifreeze solution at lowest expected temperature [see Figure A.9.2.3.2(a) for the density of propylene glycol at a variety of temperatures and Figure A.9.2.3.2(b) for the density of glycerine at a variety of temperatures]

D_H = density (g/mL) of antifreeze solution at highest expected temperature [see Figure A.9.2.3.2(a) for the density of propylene glycol at a variety of temperatures and Figure A.9.2.3.2(b) for the density of glycerine at a variety of temperatures]

This method is based on the following information:

[A.9.2.3.2b]

$$\frac{P_0 \cdot V_0}{T_0} = \frac{P_1 \cdot V_1}{T_1} = \frac{P_2 \cdot V_2}{T_2}$$

where:

V_{EC} = minimum required volume (gal) of expansion chamber

V_0 = air volume (gal) in expansion chamber at precharge (before installation)

V_1 = air volume (gal) in expansion chamber at normal static pressure

V_2 = air volume (gal) in expansion chamber at post-expansion pressure (antifreeze at high temperature)

P_0 = absolute precharge pressure (psia) on expansion chamber before installation

P_1 = absolute static pressure (psi) on water (supply) side of backflow preventer

P_2 = absolute maximum allowable working pressure (psi) for antifreeze system

T_0 = temperature (°R) of air in expansion chamber at precharge

T_1 = temperature (°R) of air in expansion chamber when antifreeze system piping is at lowest expected temperature

T_2 = temperature (°R) of air in expansion chamber when antifreeze system piping is at highest expected temperature

This equation is one formulation of the ideal gas law from basic chemistry. The amount of air in the expansion chamber will not change over time. The pressure, temperature, and volume of the air at different times will be related in accordance with this formula:

[A.9.2.3.2c]

$$V_2 = V_1 - \Delta L$$

The antifreeze in the system is essentially incompressible, so the air volume in the expansion chamber will decrease by an amount equal to the expansion of the antifreeze.

It is assumed that air is not trapped in the system piping, so the only air in the system is in the expansion chamber. This assumption is conservative, since more air is better. In reality, there will be at least some trapped air. However, only the air in the expansion chamber can be relied upon to be available when needed:

[A.9.2.3.2d]

$$V_{EC} = V_0$$

At precharge, the chamber will be completely full of air:

[A.9.2.3.2e]

$$V_{EC} = \frac{P_1 \cdot T_0 \cdot P_2 \cdot \Delta L \cdot T_1}{P_0 \cdot T_1 \left(P_2 \cdot T_1 - P_1 \cdot T_2 \right)}$$

In cases where the normal static pressure on the sprinkler system is close to the maximum working pressure, antifreeze systems are not advisable if the connection to the wet pipe system will incorporate a backflow device. In these cases, expansion of the antifreeze solution during warm weather will cause the antifreeze system to exceed the maximum working pressure, regardless of the size of the expansion chamber. The normal static pressure is too close to the maximum working pressure if the preceding formula for V_{EC} yields a negative result. If this occurs, use a dry pipe system instead or install a pressure-reducing valve before the backflow preventer.

A.9.3.5 With regard to preaction systems, it is assumed that the release system will activate before the sprinklers. It is generally accepted that smoke detectors and rate-of-rise detectors are

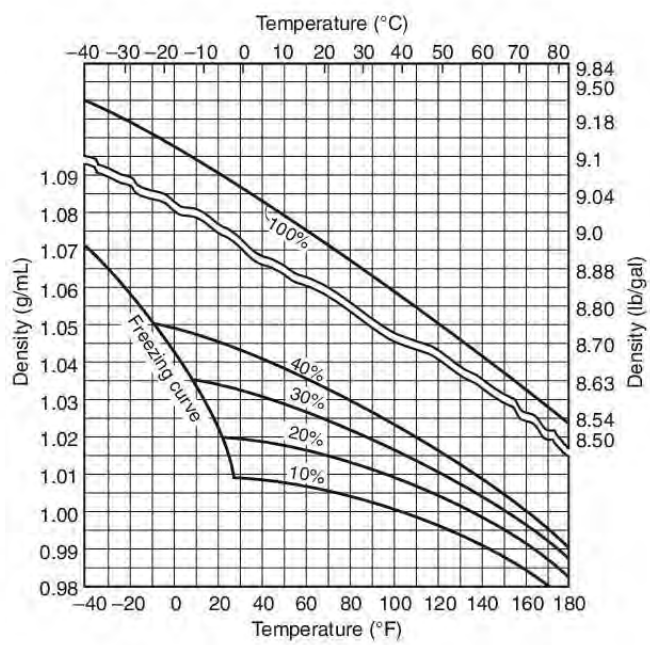

Note: The 100 percent concentration curves are provided for information only so that densities are known for calculating solutions.

FIGURE A.9.2.3.2(a) Densities of Aqueous Propylene Glycol Solutions (Percent by Weight).

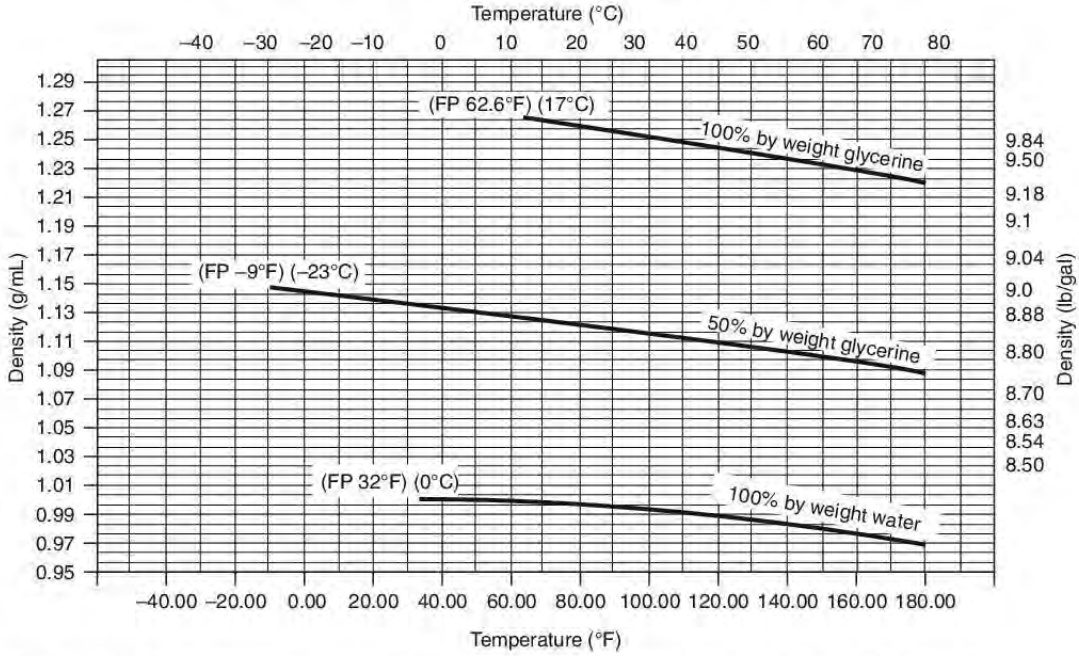

Note: The 100 percent concentration curves are provided for information only so that densities are known for calculating solutions.

FP: Freezing point.

FIGURE A.9.2.3.2(b) Densities of Aqueous Glycerine Solutions (Percent by Weight).

more sensitive than sprinklers and that fixed-temperature-release devices with RTIs lower than that of sprinklers will react faster than sprinklers at similar spacings and locations.

A.10.1.1 The minimum pressure and flow requirements need to be satisfied while also meeting the requirements of the formula $q = K(p)^{0.5}$. If a sprinkler with a K-factor of 4.3 is listed to cover an area of 18 ft × 18 ft (5.5 m × 5.5 m) at 16.2 gpm (61 L/min), the minimum pressure is required to be 14.2 psi (0.1 bar) so that the flow is achieved. Likewise, if a sprinkler with a K-factor of 5.6 is covering an area 12 ft × 12 ft (3.7 m × 3.7 m), the minimum flow is required to be 14.8 gpm (56 L/min) [the flow at 7 psi (0.5 bar)] even though a flow of 7.2 gpm (27 L/min) will satisfy the density criteria.

A.10.2 All residential sprinklers have been investigated under a flat, smooth, 8 ft (2.4 m) high horizontal ceiling. Some residential sprinklers have been investigated and listed for use under specific ceiling configurations such as a horizontal beamed ceiling. The performance of residential sprinklers under flat, smooth, horizontal ceilings has been well documented throughout the life of this standard. Prior to 2010, several manufacturers of residential sprinklers had performed testing and received listings for residential sprinklers under certain slopes and in certain beam conditions. In 2010, the Fire Protection Research Foundation (FPRF) conducted a research project consisting of 76 FDS simulations and 12 full-scale fire tests. The results have been used to develop system design criteria in a generic manner to simplify the use of residential sprinklers. Some residential sprinkler listings still exist for situations beyond the scope of the generic design. See the FPRF report, "Analysis of the Performance of Residential Sprinkler Systems with Sloped or Sloped and Beamed Ceilings," dated July 2010, for more information.

Questions are frequently asked regarding the minimum two sprinkler design when certain sprinkler performance statistics have indicated that in a majority of the cases (with residential sprinklers) the fire is controlled or suppressed with a single sprinkler. While these statistics might or might not be accurate, the water supplies for the fire sprinkler systems under which these statistics were generated were designed for two or more sprinklers in the first place. When the fires occurred, the first sprinkler operated in excess of its individual design flow and pressure because the sprinkler system's water supply was strong enough to handle multiple sprinklers and only a single sprinkler opened. At these higher flows and pressures, the discharge from a single sprinkler was sufficient to limit or suppress the heat generated from the fire. This concept is called "hydraulic increase." Hydraulic increase can also occur when a water supply's capabilities during the fire event exceeded that required by the minimum design requirements of the standard. Since none of the data used to generate the previously mentioned statistics captured the capabilities of the water supply in relation to the design requirements, the impact of the hydraulic increase on the number of single sprinkler activations cannot be determined.

But if the minimum water supply requirement of the standard is reduced to only be capable of handling a single sprinkler, then there could be no hydraulic increase safety factor. When the first sprinkler opens, it will only get the flow and pressure that were originally designed for it, and the potential is significant for that to be insufficient to control the fire, given

any obstructions and the layout of the space where the fire starts.

The National Institute for Standards and Technology (NIST), under a grant from the United States Fire Administration, studied this concept several years ago in the hopes of being able to propose a single-sprinkler flow for the 2007 edition of this standard (see NIST Report NIST GCR 05-875 prepared by Underwriters Laboratories with a publication date of February 2004). Unfortunately, the research did not support the design of a sprinkler system with only the flow for a single sprinkler, even under conditions of small rooms with flat, smooth ceilings. Without the hydraulic increase associated with the two-sprinkler design, the fire scenarios were too many where the first sprinkler to open would have insufficient flow to control the fire and then multiple sprinklers would open, causing the room to reach untenable conditions and the water supply to be overrun. These same fire scenarios were easily controlled by a sprinkler system designed for a two-sprinkler water supply from the start.

In addition to the NIST tests, the National Fire Sprinkler Association conducted a series of full-scale fire tests in simulated bedrooms that were 14 ft × 14 ft (4.2 m × 4.2 m) with an adjoining hallway, each with flat, smooth, 8 ft (2.4 m) high ceilings. The tests were performed to determine better rules for keeping sprinklers clear of obstructions like ceiling fans, but baseline tests were also performed without any obstructions at the ceiling. In nine out of the twelve tests, including the two baseline tests without obstructions at the ceiling, a sprinkler in the hall outside the room of fire origin opened first, followed by the sprinkler in the room of origin. Even though the room of origin met all of the rules of this standard as a compartment, a sprinkler outside of this room was opening first. All of these fires were controlled by the sprinklers, but if the water supply had only been sufficient for a single sprinkler, the sprinklers might not have been able to provide fire control.

For examples of selecting a compartment for consideration, see Figure A.10.2(a), Figure A.10.2(b), and Figure A.10.2(c), which show examples of design configurations for compartments based on the presence of lintels to stop the flow of heat. In all three figures, the area under consideration for determining the number of design sprinklers is the living room. In Figure A.10.2(a), the living room is considered a compartment since the opening to the hall has an 8 in. (200 mm) lintel, the opening to the dining room has an 8 in. (200 mm) lintel, and all openings on that wall are limited to 8 ft (2.4 m). In Figure A.10.2(b), the living room and dining room are considered one compartment due to the lack of a lintel between the two spaces. The hall is a separate compartment since there is still an 8 in. (200 mm) lintel between the living room and hall. In Figure A.10.2(c), the living room, dining room, and hall are considered one compartment since there are no lintels separating those spaces.

A.10.2.4 A number of variables exist that would influence the number of sprinklers that might open during a fire. In many of the fire tests that led to the development of the residential sprinkler, and in many of the subsequent tests, including the testing conducted as a part of the previously referenced FPRF sloped ceiling research project, more than two sprinklers have opened during certain fire tests, but the water supply, sized for only two sprinklers, was still capable of controlling the fire for 10 minutes and meeting the goals of this standard. While there is no guarantee that more than two sprinklers would always open, it is believed that the two-sprinkler design criterion is appropriate for ceiling constructions and room configurations that are within the limitations referenced 10.2.1 and 10.2.3.

For the ceiling constructions and room configurations that are beyond the scope of the two-sprinkler discharge criterion referenced in 10.2.1 and 10.2.3, a greater number of design sprinklers and/or higher discharge flows should be considered

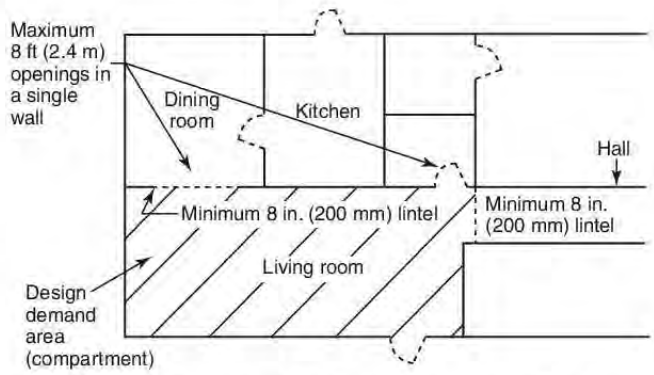

FIGURE A.10.2(a) Sprinkler Design Areas for Typical Residential Occupancy — With Lintel Between Adjoining Spaces: Dining Room and Hall.

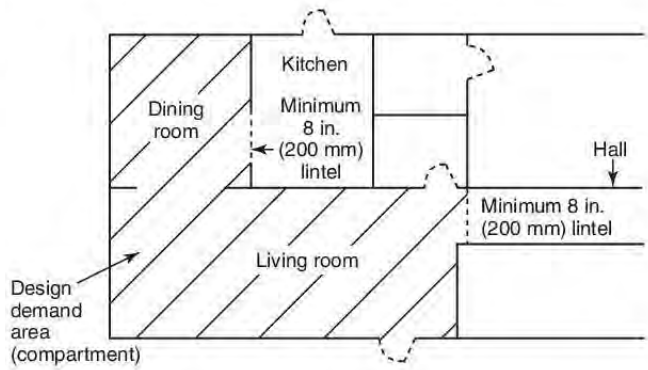

FIGURE A.10.2(b) Sprinkler Design Areas for Typical Residential Occupancy — Without Lintel Between Dining Room, With Lintel Between Hall.

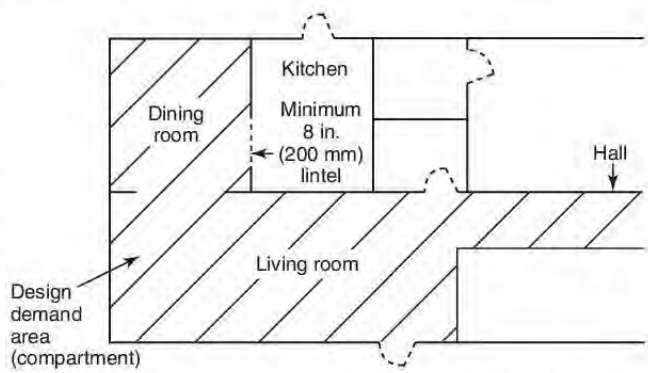

FIGURE A.10.2(c) Sprinkler Design Areas for Typical Residential Occupancy — Without Lintel Between Adjoining Spaces: Dining Room and Hall.

in the system design. As of this date, there is limited fire test data available to include specific design criteria in this standard. In these situations, sprinklers can be installed in a manner acceptable to the authority having jurisdiction to achieve the results specified in this standard. In making these determinations, consideration should be given to factors influencing sprinkler system performance, such as sprinkler response characteristics, impact of obstructions on sprinkler discharge, and number of sprinklers anticipated to operate in the event of a fire.

For the situation of flat, smooth, horizontal ceilings with beams at the ceiling, there are a number of variables that could cause many sprinklers to open during a fire. Residential sprinklers used in accordance with all of the restrictions of their listing can be used to protect this circumstance.

A.10.4.2.3 Any special listing of products covered in 10.4.2.3 should include certification by the manufacturer of personnel involved in the layout, calculation, and installation of their product.

A.10.4.2.3(1) Where a four-port fitting is used, and one of the ports is not being used to satisfy this requirement or to feed a domestic fixture, the extra port should be connected to another open port at a sprinkler or should be connected to the water supply pipe (manifold). *[See Figure A.10.4.2.3(1).]*

A.10.4.4 The determination of public water supply pressure should take into account the probable minimum pressure conditions prevailing during such periods as during the night or during the summer months when heavy usage can occur. The possibility of interruption by floods or ice conditions in winter also should be considered. *[See Figure A.10.4.4(a), Figure A.10.4.4(b), Table A.10.4.4(a), Table A.10.4.4(b), Table A.10.4.4(c), and Table A.10.4.4(d).]*

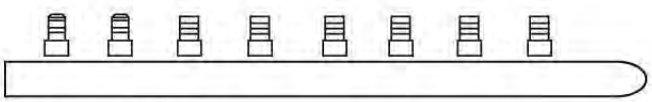

FIGURE A.10.4.2.3(1) Water Supply Manifold.

A.10.4.4(4) The total length includes equivalent length of fittings as determined by applying Table 10.4.4(b), Table 10.4.4(c), Table 10.4.4(d), or Table 10.4.4(e).

A.10.4.4(6) The flow through water meters is not limited by Table 10.4.4(a). The friction losses in this table are not given for high flows because they are not standardized by all manufacturers. Every size meter has a rated flow (up to which friction losses are generally published by manufacturers). But for flows greater than rated flow, many manufacturers do not publish friction loss data. This does not prohibit the use of such meters. It just means that the friction loss must be obtained before deciding to use any specific meter.

The purpose of the rated flow of a meter has to do with the daily and continuous use of the meter. Higher flows are permitted for meters over short durations. An NFPA 13D sprinkler system is only expected to deliver water for 10 minutes. Flows significantly higher than rated flows can go through water meters for 10 minutes, with no adverse effects on the meter.

To prove that higher flows for short durations are not a problem, the Fire Protection Research Foundation (FPRF) sponsored testing of many different models of many different flow meters at greater than rated flows for 20 minutes. During the tests, friction losses through the meters were obtained. The report showed that regular water meters had no problem with significantly higher flows than rated flow for the 20-minute duration. An example of the data from the experiments is shown in Figure A.10.4.4(6), which shows the results from testing four different ⅝ in. positive displacement meters. The dark curve on the graph represents the friction loss information from Table 10.4.4(a) of this standard. The full report of the FPRF can be downloaded from the NFPA website at http://www.nfpa.org/research/fire-protection-research-foundation/reports-and-proceedings/suppression.

A.10.4.9.2(6)(d) The required pressure is provided in the sprinkler manufacturer's published data for the specific sprinkler model based on the selected flow rate.

Table A.10.4.4(a) Pressure Losses in psi/ft for Schedule 40 Steel Pipe (C = 120)

Pipe Size (in.)	Flow Rate (gpm)											
	10	12	14	16	18	20	25	30	35	40	45	50
1	0.04	0.05	0.07	0.09	0.11	0.13	0.20	0.28	0.37	0.47	0.58	0.71
1¼	0.01	0.01	0.02	0.02	0.03	0.03	0.05	0.07	0.10	0.12	0.15	0.19
1½	0.01	0.01	0.01	0.01	0.01	0.02	0.02	0.03	0.05	0.06	0.07	0.09
2	—	—	—	—	—	0.01	0.01	0.01	0.01	0.02	0.02	0.03
Pipe Size (mm)	**Flow Rate (L/min)**											
	38	45	53	61	68	75	95	115	130	150	170	190
25	0.0090	0.0113	0.0158	0.0204	0.0249	0.0294	0.0452	0.0633	0.0837	0.1063	0.1312	0.1606
32	0.0023	0.0023	0.0045	0.0045	0.0068	0.0068	0.0113	0.0158	0.0226	0.0271	0.0339	0.0430
40	0.0023	0.0023	0.0023	0.0023	0.0023	0.0045	0.0045	0.0068	0.0113	0.0136	0.0158	0.0204
50	—	—	—	—	—	0.0023	0.0023	0.0023	0.0023	0.0045	0.0045	0.0068

For SI units, 1 gal = 3.785 L; 1 psi = 0.0689 bar; 1 in. = 25.4 mm; 1 ft = 0.3048 m.

Table A.10.4.4(b) Pressure Losses in psi/ft for Copper Tubing — Types K, L, and M (C = 150)

Tubing Size (in.)	Type	Flow Rate (gpm)											
		10	12	14	16	18	20	25	30	35	40	45	50
¾	M	0.08	0.12	0.16	0.20	0.25	0.30	0.46	0.64	0.85	—	—	—
	L	0.10	0.14	0.18	0.23	0.29	0.35	0.53	0.75	1.00	—	—	—
	K	0.13	0.18	0.24	0.30	0.38	0.46	0.69	0.97	1.28	—	—	—
1	M	0.02	0.03	0.04	0.06	0.07	0.08	0.13	0.18	0.24	0.30	0.38	0.46
	L	0.03	0.04	0.05	0.06	0.08	0.10	0.15	0.20	0.27	0.35	0.43	0.53
	K	0.03	0.04	0.06	0.07	0.09	0.11	0.17	0.24	0.31	0.40	0.50	0.61
1¼	M	0.01	0.01	0.02	0.02	0.03	0.03	0.05	0.07	0.09	0.11	0.15	0.17
	L	0.01	0.01	0.02	0.02	0.03	0.03	0.05	0.07	0.10	0.12	0.16	0.19
	K	0.01	0.01	0.02	0.02	0.03	0.04	0.06	0.08	0.11	0.13	0.17	0.20
1½	M	—	0.01	0.01	0.01	0.01	0.01	0.02	0.03	0.04	0.05	0.06	0.08
	L	—	0.01	0.01	0.01	0.01	0.01	0.02	0.03	0.04	0.05	0.07	0.08
	K	—	0.01	0.01	0.01	0.01	0.02	0.02	0.03	0.05	0.06	0.07	0.09
2	M	—	—	—	—	—	—	0.01	0.01	0.01	0.01	0.02	0.02
	L	—	—	—	—	—	—	0.01	0.01	0.01	0.01	0.02	0.02
	K	—	—	—	—	—	—	0.01	0.01	0.01	0.01	0.02	0.02
Tubing Size (mm)	**Type**	**Flow Rate (L/min)**											
		38	45	53	61	68	75	95	115	130	150	170	190
20	M	0.0181	0.0271	0.0362	0.0452	0.0566	0.0679	0.1041	0.1448	0.1923	—	—	—
20	L	0.0226	0.0317	0.0407	0.0520	0.0656	0.0792	0.1199	0.1697	0.2262	—	—	—
20	K	0.0294	0.0407	0.0543	0.0679	0.0860	0.1041	0.1561	0.2194	0.2896	—	—	—
25	M	0.0045	0.0068	0.0090	0.0136	0.0158	0.0181	0.0294	0.0407	0.0543	0.0679	0.0860	0.1041
25	L	0.0068	0.0090	0.0113	0.0136	0.0181	0.0226	0.0339	0.0452	0.0611	0.0792	0.0973	0.1199
25	K	0.0068	0.0090	0.0136	0.0158	0.0204	0.0249	0.0385	0.0543	0.0701	0.0905	0.1131	0.1380
32	M	0.0023	0.0023	0.0045	0.0045	0.0068	0.0068	0.0113	0.0158	0.0204	0.0249	0.0339	0.0385
32	L	0.0023	0.0023	0.0045	0.0045	0.0068	0.0068	0.0113	0.0158	0.0226	0.0271	0.0362	0.0430
32	K	0.0023	0.0023	0.0045	0.0045	0.0068	0.0090	0.0136	0.0181	0.0249	0.0294	0.0385	0.0452
40	M	—	0.0023	0.0023	0.0023	0.0023	0.0023	0.0045	0.0068	0.0090	0.0113	0.0136	0.0181
40	L	—	0.0023	0.0023	0.0023	0.0023	0.0023	0.0045	0.0068	0.0090	0.0113	0.0158	0.0181
40	K	—	0.0023	0.0023	0.0023	0.0023	0.0045	0.0045	0.0068	0.0113	0.0136	0.0158	0.0204
50	M	—	—	—	—	—	—	0.0023	0.0023	0.0023	0.0023	0.0045	0.0045
50	L	—	—	—	—	—	—	0.0023	0.0023	0.0023	0.0023	0.0045	0.0045
50	K	—	—	—	—	—	—	0.0023	0.0023	0.0023	0.0023	0.0045	0.0045

For SI units, 1 gal = 3.785 L; 1 psi = 0.0689 bar; 1 in. = 25.4 mm; 1 ft = 0.3048 m.

Table A.10.4.4(c) Pressure Losses in psi/ft for CPVC Pipe (C = 150)

Nominal Pipe Size (in.)	Actual Pipe Size (in.)	Flow Rate (gpm)											
		10	12	14	16	18	20	25	30	35	40	45	50
¾	0.874	0.05	0.07	0.10	0.13	0.16	0.19	0.29	0.40	0.53	0.68	0.85	1.03
1	1.101	0.02	0.02	0.03	0.04	0.05	0.06	0.09	0.13	0.17	0.22	0.28	0.34
1¼	1.394	0.01	0.01	0.01	0.01	0.02	0.02	0.03	0.04	0.05	0.07	0.09	0.11
1½	1.598	—	—	0.01	0.01	0.01	0.01	0.02	0.02	0.03	0.04	0.04	0.05
2	2.003	—	—	—	—	—	—	0.01	0.01	0.01	0.01	0.01	0.02
Nominal Pipe Size (mm)	**Actual Pipe Size (mm)**	**Flow Rate (L/min)**											
		38	45	53	61	68	75	95	115	130	150	170	190
20	22.2	0.0113	0.0158	0.0226	0.0294	0.0362	0.0430	0.0656	0.0905	0.1199	0.1538	0.1923	0.2330
25	28.0	0.0045	0.0045	0.0068	0.0090	0.0113	0.0136	0.0204	0.0294	0.0385	0.0498	0.0633	0.0769
32	35.4	0.0023	0.0023	0.0023	0.0023	0.0045	0.0045	0.0068	0.0090	0.0113	0.0158	0.0204	0.0249
40	40.6	—	—	0.0023	0.0023	0.0023	0.0023	0.0045	0.0045	0.0068	0.0090	0.0090	0.0113
50	50.9	—	—	—	—	—	—	0.0023	0.0023	0.0023	0.0023	0.0023	0.0045

For SI units, 1 gal = 3.785 L; 1 psi = 0.0689 bar; 1 in. = 25.4 mm; 1 ft = 0.3048 m.

Table A.10.4.4(d) Pressure Losses in psi/ft for PEX Pipe (C = 150)

Nominal Pipe Size (in.)	Actual Pipe Size (in.)	Flow Rate (gpm)											
		10	12	14	16	18	20	25	30	35	40	45	50
¾	0.68	0.18	0.25	0.33	0.43	0.53	0.64	0.97	1.36	1.81	2.32	2.88	3.50
1	0.875	0.05	0.07	0.10	0.12	0.16	0.19	0.28	0.40	0.53	0.68	0.84	1.03
1¼	1.07	0.02	0.03	0.04	0.05	0.06	0.07	0.11	0.15	0.20	0.26	0.32	0.39
1½	1.263	0.01	0.01	0.02	0.02	0.03	0.03	0.05	0.07	0.09	0.11	0.14	0.17
2	1.653	—	—	—	0.01	0.01	0.01	0.01	0.02	0.02	0.03	0.04	0.05
Nominal Pipe Size (mm)	**Actual Pipe Size (mm)**	**Flow Rate (L/min)**											
		38	45	53	61	68	75	95	115	130	150	170	190
20	17.3	0.0407	0.0566	0.0747	0.0973	0.1199	0.1448	0.2194	0.3077	0.4095	0.5248	0.6515	0.7918
25	22.2	0.0113	0.0158	0.0226	0.0271	0.0362	0.0430	0.0633	0.0905	0.1199	0.1538	0.1900	0.2330
32	27.2	0.0045	0.0068	0.0090	0.0113	0.0136	0.0158	0.0249	0.0339	0.0452	0.0588	0.0724	0.0882
40	32.1	0.0023	0.0023	0.0045	0.0045	0.0068	0.0068	0.0113	0.0158	0.0204	0.0249	0.0317	0.0385
50	42.0	—	—	—	0.0023	0.0023	0.0023	0.0023	0.0045	0.0045	0.0068	0.0090	0.0113

A.11.2.1 Fire department connections are not required for systems covered by this standard but can be installed at the discretion of the owner. In these cases, hydrostatic tests in accordance with NFPA 13 are necessary.

Dry systems should also be tested with air at the pressure value intended to be maintained within the system during service. This testing should be conducted in accordance with the guidance provided in the manufacturers' instructions for the dry system components. Any leak that results in a drop in system pressure greater than 1½ psi (0.14 bar) in 24 hours should be corrected. Leaks should be identified using soapy water brushed on each joint or coupling. The presence of bubbles indicates a leak. This test should be made prior to concealing the piping. The soap should be compatible with all contacted sprinkler system components.

A.11.2.2 The flow of water is necessary to make sure that the pump does not get damaged during testing. The use of a timer to keep the pump running is not recommended because the timer will allow the pump to run when no water is flowing. The pump needs to run for the entire duration without interruption, including not tripping the circuit breaker.

A.11.2.2.1.1 There should be no delay in the activation of the pump upon flow of water.

A.12.1 These instructions should include the following:

(1) Information regarding the necessary system inspection, testing, and maintenance as described in this standard
(2) The manufacturers' installation, care, and maintenance instructions for the installed sprinkler system components
(3) Name, address, and phone number of the installing contractor of the fire sprinkler system
(4) Name, address, and phone number of a fire sprinkler system service company if different than the installing contractor

The occupants of a home with a sprinkler system should understand that maintaining a sprinkler system is mostly about common sense. Keeping the control valve open, not hanging items from the sprinklers, and making sure that the sprinklers do not get painted or obstructed are the most important items. It is also important to know the function of the main control valve and where the control valve is located.

A.12.2 The building owner or manager should understand the sprinkler system operation and conduct periodic inspections and tests to make sure that the system is in good working condition. A recommended inspection and testing program includes the following:

(1) Monthly inspection of all valves to ensure that they are open
(2) Monthly inspection of tanks and other stored water sources, if present, to confirm they are full
(3) Monthly testing of pumps, if present, to make sure they operate properly and do not trip circuit breakers when starting
(4) Testing of all waterflow devices, when provided, every 6 months including monitoring service (note that notification of the monitoring service is essential to make sure that the fire department is not called due to testing)
(5) Ongoing visual inspection of all sprinklers to make sure they are not obstructed, damaged, corroded, covered with foreign materials, field painted, or showing signs of leakage, and that decorations are not attached to them
(6) Annually, fully open the test connection downstream of any pressure-reducing or pressure-regulating valve, and make sure that the pressure gauge reads a reasonable value
(7) Inspect systems by individuals knowledgeable and trained in such systems when there is a change in ownership

A.12.3.2.1 It is recognized that the flow and pressure available to the replacement sprinkler might be less than its current flow and pressure requirement.

A.12.3.3.2 Whenever painting or home improvements are made in the dwelling unit, special attention should be paid to ensure that sprinklers are not painted or obstructed either at the time of installation or during subsequent redecoration. This is as important for the cover plates of concealed sprinklers as it is to the sprinklers themselves. Special paint is used for cover plates and can only be applied by the manufacturer. Applying paint to cover plates outside of the factory can cause the sprinkler to malfunction and possibly not operate during a fire. When painting is occurring in the vicinity of sprinklers, the sprinklers should be protected by covering them with a bag, which should be removed immediately after painting is finished. For concealed-type sprinklers, the cover plates should be removed (most are designed to be unscrewed) and then the

	Individual Loss	Net Total
(1) Water pressure in street _____	_____	_____
(2) Arbitrarily select pipe size _____		
(3) Deduct meter loss (size) _____	_____	_____
(4) Deduct head loss for elevation		
[_____ ft (m) × 0.433 psi/ft (0.098 bar/m)] _____		
(5) Deduct pressure loss from city main to sprinkler system control valve* _____		
____ Pipe _____ ft (m)	_____	_____
____ Valves _____ ft (m)	_____	_____
____ Elbows _____ ft (m)	_____	_____
____ Tee _____ ft (m)	_____	_____
____ Total _____ ft (m) × _____	_____	_____
(6) Deduct pressure loss for piping control valve to farthest sprinkler*		

Size	Quantity	Description	Total Equivalent (ft) (m)
____	_____	90 degree elbow	_____
____	_____	45 degree elbow	_____
____	_____	Tee	_____
____	_____	Check valve	_____
____	_____	Valve (_____)	_____
____	_____	Total	_____ ft (m) × ____ = ____

Size	Quantity	Description	Total Equivalent (ft) (m)
____	_____	90 degree elbow	_____
____	_____	45 degree elbow	_____
____	_____	Tee	_____
____	_____	Check valve	_____
____	_____	Valve (_____)	_____
____	_____	Total	_____ ft (m) × ____ = ____

Remaining pressure for sprinkler operation _____

* Factors from Table 10.4.4(a) through Table 10.4.4(e).

FIGURE A.10.4.4(a) Calculation Sheet.

	Individual Loss	Net Total
Water pressure at supply outlet		
(1) Deduct head loss for elevation	_____	_____
[_____ ft (m) × 0.433 psi/ft (0.098 bar/m)]	_____	_____
(2) Deduct pressure loss from piping within building*	_____	_____
Remaining pressure for sprinkler operation	_____	_____

*Factors from Table 10.4.4(a) through Table 10.4.4(e).

FIGURE A.10.4.4(b) Calculation Sheet — Elevated Tank, Booster Pump, Pump Tank Supply.

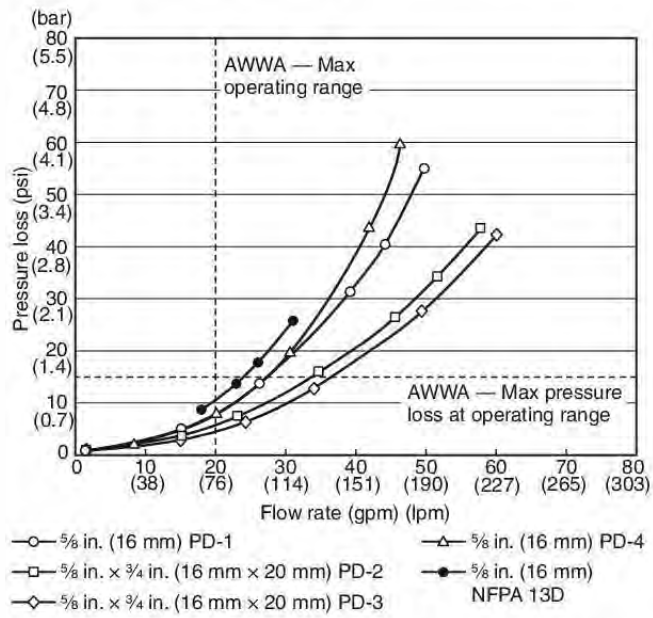

FIGURE A.10.4.4(6) ⅝ in. Water Meter Data from FPRF Tests.

sprinklers should be protected underneath from paint and overspray with a bag. After the painting is finished, the bags should be removed from the sprinklers and the cover plates should be replaced.

A.12.3.4 See Figure A.9.1.1(a) through Figure A.9.1.1(d) for possible methods used by the installer to insulate sprinkler piping in unheated areas. It is important that this insulation not be disturbed or removed. Disturbing or removing this insulation could result in sprinkler pipes being frozen during winter months that would not only block water flow to the sprinklers but could cause broken pipes and fittings.

A.12.3.5 Sampling from the top and bottom of the system helps to determine if the solution has settled. Antifreeze solutions are heavier than water. If the antifreeze compound is separating from the water due to poor mixing, it will exhibit a higher concentration in the lower portion of the system than in the upper portions of the system. If the concentration is acceptable near the top, but too low near the water connection, it could mean that the system is becoming diluted near the water supply. If the concentration is either too high or too low in both the samples, it could mean that the wrong concentration was added to the system.

On an annual basis, test samples should be drawn from test valve B as shown in Figure 9.2.3.1.1, especially if the water portion of the system has been drained for maintenance or repairs. A small hydrometer can be used so that a small sample is sufficient. Where water appears at valve B, or where the sample indicates that the solution has become weakened, the

entire system should be emptied and refilled with acceptable solution as previously described.

Where systems are drained in order to be refilled, it is not typically necessary to drain drops that are less than 36 in. (900 mm) in length. Most systems with drops have insufficient volume to cause a problem, even if slightly higher concentration solutions collect in the drops. For long drops with significant volume, consideration should be given to draining drops if there is evidence that unacceptably high concentrations of antifreeze have collected in these long drops.

When emptying and refilling antifreeze solutions, every attempt should be made to recycle the old solution with the antifreeze manufacturer rather than discarding it.

See Table A.12.3.5. The manufacturer's technical data sheets can include specific information on the properties of their antifreeze solutions.

A.12.3.5.1.1.3 If not already present, test connections (valves) for collection of solution samples should be installed at the highest and lowest practical locations of the system or portion of the system containing antifreeze solution.

A.12.3.5.1.3 In the past, for some existing systems subject to extremely low temperatures, antifreeze solutions with concentrations greater than what is now permitted by this standard were used. Such high concentrations of antifreeze are no longer permitted. In situations where extremely low temperatures are anticipated, refilling the fire sprinkler system with a concentration of antifreeze solution currently permitted by the standard might not provide sufficient freeze protection without additional measures. Such measures might include converting the antifreeze system to another type of sprinkler system.

A.12.3.6.1 The primary purpose of this standard is protection against injury and life loss. There are many instances when an installed system needs to be taken out of service such as for shipping or storage of a manufactured home, when extensive renovation or remodeling work is going on in the home, or when the home will be unoccupied for an extended period of time such as when a summer home is closed up for winter. This section provides guidance for taking an installed system out of service when there is little or no risk of injury or life loss. This guidance is especially needed when the detached dwelling or manufactured home is subject to freezing temperatures. Once the home is to be occupied again, the system should be tested for leaks and the system and components inspected and tested before being restored to service.

Table A.12.3.5 Properties of Glycerine and Propylene Glycol for Existing Systems

Material	Solution (by volume) (%)	Specific Gravity at 77°F (25°C)	Freezing Point °F	Freezing Point °C
Glycerine (C.P. or U.S.P. grade)	0	1.000	32	0
	5	1.014	31	-0.5
	10	1.029	28	-2.2
	15	1.043	25	-3.9
	20	1.059	20	-6.7
	25	1.071	16	-8.9
	30	1.087	10	-12
	35	1.100	4	-15.5
	40	1.114	-2	-19
	45	1.130	-11	-24
	50	1.141	-19	-28
Propylene glycol	0	1.000	32	0
	5	1.004	26	-3
	10	1.008	25	-4
	15	1.012	22	-6
	20	1.016	19	-7
	25	1.020	15	-10
	30	1.024	11	-12
	35	1.028	2	-17
	40	1.032	-6	-21

C.P.: Chemically Pure. U.S.P.: United States Pharmacopoeia 96.5%.

A.12.3.6.2.1 For drops less than 4 in. (100 mm) long, the branch line piping and the drops can both be installed in areas subject to freezing. Tests prove that if the branch line is empty of water and water is in a drop, when ice forms it will expand into the branch piping without harming the sprinkler or the system piping.

For horizontal sidewall sprinklers, the testing manifolds were comprised of 1 in. (25 mm) CPVC pipe and fittings, and the sprinklers were installed into 1 in. × ½ in. (25 mm × 15 mm) sprinkler adapter reducing elbows that were located 4 in. (100 mm) from the centerline of the branch line. For pendent sprinklers, the testing manifolds were comprised of 1 in. (25 mm) CPVC pipe and fittings, and the sprinklers were installed into a 1 in. × ½ in. (25 mm × 15 mm) sprinkler adapter fitting with a 4 in. (100 mm) long pipe nipple.

Annex B Incentives for Residential Fire Sprinkler Use — Advantages for Builders, Developers, and Communities

This annex is not a part of the requirements of this NFPA document but is included for informational purposes only.

B.1 Introduction. This annex offers guidance on the financial value of residential fire sprinkler systems to developers, home builders, and communities. Also discussed are attractive options for design flexibility that can be used when sprinklers are installed. Although U.S. model codes require all new residential occupancies to have fire sprinkler systems, primarily for life safety of occupants, states and local communities might not follow this guidance.

The content of this annex is based primarily on model codes that are used in the United States because fire sprinkler incentives, such as cost offsets and design options, are well integrated into these codes, which include NFPA 1 (IFC), *NFPA 5000,* the *International Residential Code* (IRC), the *International Building Code* (IBC), and the *International Fire Code.* The underlying concepts employed in U.S. codes can easily be extended for use in other countries looking to incentivize the use of home fire sprinklers.

This annex has been organized in a way that groups sprinkler incentives into the following categories, which follow Section B.2:

(1) Community process and infrastructure
(2) Site planning and development
(3) Building construction
(4) Community risk reduction
(5) Environmental stewardship
(6) Sustainability of homes and affordable housing

B.2 Background. The most commonly cited objection to installing fire sprinkler systems in new homes is cost, with an underlying assumption that installing sprinklers will increase

the cost of a new home. However, this assumption typically overlooks incentives that are embedded into model codes as a basis for reducing the net cost of sprinkler installations.

In fact, cost offsets can and have saved developers and builders money vs. building without sprinklers. For example, one remote property proposed for development initially required installing thousands of feet of underground water main to feed fire hydrants in the new community. The developer was spared that expense by committing to install sprinklers in all of the homes. In another case, a developer was able to avoid having to provide a second community access road up a large incline, saving enough money to more than offset the cost of adding sprinklers to the new homes.

There are also cases where properties were able to be developed, that would otherwise not have been possible, based on including sprinklers as part of the development agreement. These cases have included properties that did not have sufficient access for emergency vehicles, rural properties that had no nearby water mains, and properties that were located in areas with high wildfire risk.

In addition to cost incentives for developers and builders, home fire sprinklers offer financial advantages to communities where such systems are installed. For example, by allowing fewer fire hydrants and lower water demands, sprinklered communities reduce the need for water infrastructure. Less water demand can equate to reduced water storage needs and fewer water storage tanks and pumps. Fewer fire hydrants means reduced fire hydrant inspection and maintenance costs.

Communities can also benefit from sprinklers by reducing health and safety risks for firefighters. The intangible value of helping to protect those who are dedicated to serving us is obvious, but what is often overlooked is the financial cost to a community associated with caring for and supporting firefighters and their families when a firefighter is injured or killed fighting a residential fire. Costs of burn care, rehabilitation, and retiring disabled firefighters can be particularly difficult for small communities to bear, and sprinklered homes protect firefighters as well as occupants from these scenarios.

By understanding the value of available incentives, developers, builders, and communities will be better able to make informed choices regarding the net cost, or savings, associated with home fire sprinklers.

B.3 Community Process and Infrastructure. Installation of home fire sprinkler systems bring opportunity and creativity to new communities. Engineers, developers, builders, AHJs, and community leaders always look for ideas that can provide more choices as well as more value to the homeowner while keeping cost to a minimum. Home fire sprinklers not only provides choices and value at a low cost, they also provide life safety for firefighters and citizens against fire. Home fire sprinklers are part of the solution and prevention of the quick spread and indefinite number of structure fires in communities. The questionable assumptions of higher home costs due to home fire sprinklers usually restricts or denies the opportunity for necessary fire sprinkler installation. This assumption of high costs associated with fire sprinkler installation must be addressed during community planning development, especially when the cost of installing fire sprinklers is comparable to carpet upgrades, paving a stone driveway, or the purchase of a hot tub bath. Other cost discussions that also need to be addressed are all the different trade-ups, or incentives, to better utilize community land and infrastructure cost savings.

Home fire sprinkler outreach programs can be very successful through messaging, social media, and demonstration. An example of successful demonstration is hosting side-by-side fire simulation displays. Side-by-side burns demonstrate furnishings in a modern living area, including a couch, a table set, and so forth, that does not have fire sprinklers. The adjacent, identically furnished room does include fire sprinklers. This side-by-side demonstration allows future engineers, developers, builders, AHJs, and community leaders the opportunity to experience first-hand the effectiveness and benefits of home fire sprinklers. It is also an opportunity to be readily available to have a real-time question-and-answer dialogue about the importance of home fire sprinkler systems. Having media exposure during these demonstrations also augments the importance of home fire sprinklers.

B.3.1 Construction Incentives and Benefits. There are plenty of opportunities to reduce cost in the development and building of a community with respect to the installation of home fire sprinklers. Some of the benefits include, but are not limited to, reduced or waived construction fees for water metering, utility connections, and permitting. Some other features include earlier building start dates due to development and building plan review, approval accelerations, and zone bylaw change exemptions for fire service response time, as well as subdivision single entrance and exit exemptions. In normal conditions these exemptions require two separate fire apparatus access roads where there are more than 30 dwelling units; however, where sprinklered to NFPA 13D, access from two directions is not required (IFC D107.1). Fire flow is the amount of water in gallons per minute available for a fire department when responding to home fires. Home fire sprinklers reduce the fire flow amount and duration by one half [IFC Table B105.1(1)]. Fire hydrant spacing with the installation of home fire sprinklers increases the hydrant spacing distance between hydrants and increases the distance of the building footprint to the road frontage by 25 percent (IFC Table C102.1 footnote g).

B.3.2 Homeowner Incentives and Benefits. Homeowners continue to endure cost increases over time and home fire sprinklers can play a role in helping with that burden. Some of these incentives for homeowners to install fire sprinklers result in reduction in property taxes, reduced property loss and damage should a fire occur in the home, home insurance policy credits, and many times special financing options such as no interest loans, tax incentives, and so forth.

B.3.3 Residential Water Meters. Many communities include requirements to meter the water that supplies a residential fire sprinkler system. Though meters are not required in the NFPA 13D standard, any pressure losses attributed to water flowing through these devices must be accounted for in the system design. This can lead to assumptions being made that the meter must always be upsized to accommodate pressure losses, which is not always the case. Meter upsizing and associated fees can create cost-related barriers to a broader acceptance of residential fire sprinklers. While the upsizing is in many cases justified by the demand of the system, there are many variables and design options that should be considered. These can include the following:

(1) Listing. NFPA 13D does not require that water meters be listed for fire protection use. The standard maintains a long-standing philosophy that devices and materials in

the water supply need only be compatible with materials acceptable in the model plumbing codes.

(2) Flowing through smaller meters. Flowing through meters at volumes that exceed the published values of the meter is a widely accepted practice by jurisdictions, based on the limited duration required by the sprinkler system, which is 10 minutes in NFPA 13D.

(3) "Low-flow" residential sprinklers. If designing a system through a small meter is desired, and sufficient pressure is available, there are a variety of "low-flow" sprinklers on the market that can be utilized to achieve a 20 gpm system demand. Many traditional ⅝ in. disc or positive-displacement meters carry a 20 gpm continuous flow rating.

(4) Solid-state meters. Many communities are starting to move toward new, solid-state meters that utilize ultrasonic and other technologies to eliminate moving parts within the flow chamber of the meter, which can result in a higher published flow value with less friction loss.

(5) Sprinkler spacing options. Many sprinkler manufacturers have low-flow pendent residential sprinklers available that utilize a 15 × 15 ft spacing, based on a 2017 revision to UL 1626, *Residential Sprinklers for Fire-Protection Service*. This spacing is intended to flow two sprinklers through a ⅝ in. solid-state meter, which has a published flow rate of 25 gpm.

B.4 Site Planning and Development. In jurisdictions without home fire sprinkler code requirements, AHJs can work with planners, builders, and developers to provide cost-saving trade ups or incentives when the development is protected with home fire sprinklers. Trade ups or incentives often allow better utilization of land and infrastructure cost savings.

B.4.1 Street-Width Reduction. Traffic lanes can be narrowed, substantially reducing the amount of pavement in every linear foot of street in the development. Many communities will charge drainage fees for land that is considered "impervious," such as paved areas. When road widths are reduced, this can result in both increased land available for lots and less "impervious" cover (IFC Appendix D).

B.4.2 Longer Dead-End Streets. Dead-end streets can be increased in length, allowing additional building lots to be accessed (IFC 503.1.1).

B.4.3 Tee Turnarounds Permitted. The permitted use of tee turnarounds in sprinklered developments can create at least one additional lot per cul-de-sac (IFC Appendix D).

B.4.4 Increased Street Grades and Building Setbacks. Steeper street grades and building locations are allowed further from where the home's access leaves the main road (IFC 503.1.1).

B.4.5 Additional Units Permitted. Development plans allow homes to be closer together. The IRC allows a reduction in the distance required from the home to the lot line [IRC Table R302.1(2)].

B.4.6 Expansion of Existing Water Supply May Not Be Needed. Required fire flows for fully sprinklered developments can be greatly reduced compared to non-sprinklered developments (IFC Appendix B).

B.4.7 Increased Hydrant Spacing. Supply mains can be reduced and hydrant spacing can be increased (IFC Appendix C).

B.4.8 Subdivision Single Access Point. A fully sprinklered subdivision allows for a single public access road. This decreases infrastructure costs and significantly increases the number of single-family dwellings allowed (IFC Appendix D).

B.4.9 Gated Communities. Gated communities can delay fire department access. A fully sprinklered subdivision provides mitigation for this impact, allowing developers to utilize this security option when desired.

B.5 Building Construction. The *International Residential Code* (IRC) is the predominant model residential code in the U.S. According to the National Fire Sprinkler Association, "Guide to Benefits of Fire Sprinklers in the IRC — From 2000 to 2018," the IRC as a model code requires sprinklers throughout one- and two-family homes and townhouses; however, several jurisdictions remove the fire sprinkler mandate. This guidance is useful to sprinklered and unsprinklered IRC users as it locates each fire sprinkler benefit in the IRC, summarizes the benefit, quotes the IRC section number (as it pertains to the 2021 edition), and identifies which edition of the IRC the benefit was first introduced into the code and remains in the IRC up to the 2021 edition.

B.5.1 Exterior Walls. Exterior walls of homes with sprinklers can be built closer to lot line. Sprinklers allow wider projections, more openings in walls, and more penetrations on an exterior wall than unsprinklered dwellings [IRC Table R 302.1(2)].

B.5.2 Townhouses. The common wall between townhomes can be reduced from a 2-hour to a 1-hour fire-resistance-rated wall where dwellings on both sides of the common wall are sprinklered (IRC R302.2.2).

B.5.3 Structural Independence. The common wall between sprinklered townhouses does not have to bear on a foundation provided the height limits for the overall townhouse building are not exceeded (IRC R302.2.6).

B.5.4 Two-Family Dwelling. Dwelling unit separation of duplex walls can be reduced from 1 hour to 30 minutes where sprinklered. For other than the 2021 edition of the IRC, this is the only occurrence in the IRC where an NFPA 13 system is indicated for the benefit (IRC R302.3).

B.5.5 Penetrations. Nonmetallic pipe of wet fire sprinkler systems is allowed in common walls of townhouses and is permitted to be installed as through penetrations with the annular space filled with noncombustible material. Membrane penetrations of nonmetallic pipe of wet fire sprinkler systems are permitted to be protected with metal escutcheons [IRC R302.4 (3)].

B.5.6 Fire Protection of Floors. Fire sprinklers eliminate ½ in. gypsum or ⅝ in. wood panel on the underside of floors (IRC R302.13).

B.5.7 Residential Subdivisions. Residential subdivisions where all homes are sprinklered can have nonrated exterior walls, unprotected openings, and penetrations with a zero feet lot line. Adjoining lot line setback shall be 6 ft minimum. Where attached garages have exterior walls adjacent to the lot line, garages shall have sprinklers [IRC Table R302.1 (2) Footnote and R309.5].

B.5.8 Emergency Escape Windows in Basements. Fire sprinklers eliminate emergency escape and rescue openings in every

basement sleeping rooms where one of the following is present (IRC R310.1):

(1) One means of egress according to IRC R311 and one emergency escape and rescue opening
(2) Two means of egress according to IRC R311

B.5.9 Mezzanines. Open and unenclosed mezzanine area can be increased to one-half (an increase from one-third) of the floor area of the room of sprinklered dwellings. This cannot be combined with enclosed mezzanine exceptions in IRC R325.5. and IRC R325.3.

Mezzanines in buildings up to two stories, having two or more means of egress are not required to be open to the same room as the mezzanine where sprinklers are installed according to NFPA 13R and NFPA 13D (IRC R325.5).

B.5.10 Habitable Attic. A habitable attic is not considered a story above grade plane provided it is not greater than one-half of the floor area of the story below the habitable attic, it is located within a dwelling unit, and it is equipped throughout with fire sprinklers (IRC R326.3).

B.5.11 Commercial Occupancies in Residential Settings. The following International Building Code (IBC) occupancies permits some occupancies that are traditionally commercial in nature to be built to the IRC to fit into residential neighborhoods and subdivisions. When sprinklers are installed per IRC P2904 or NFPA 13D throughout, the following are constructed as a single-family home or townhome:

(1) Live/work units located in townhomes (IRC R101.2)
(2) Owner-occupied lodging with five or fewer guestrooms (IRC R101.2)
(3) A care facility with five or fewer persons receiving custodial care within a dwelling unit (IRC R101.2)
(4) A care facility with five or fewer persons receiving medical care within a dwelling unit (IRC R101.2)
(5) A care facility for five or fewer persons receiving care that are within a single-family dwelling (IRC R101.2)

B.6 Community Risk Reduction. Without home fire sprinklers, increased community risk and costs related to firefighters and citizens' safety has changed dramatically. Fires behave and perform differently today compared to historic fires. Scientific fire research tests have unfortunately confirmed and demonstrated that today's modern building contents and building materials burn at a faster rate, release more toxic gases, reach higher temperatures, and experience flashover much quicker compared to fires that occurred in the past. Negative fire behaviors in homes can be attributed to plenty of factors such as recycled materials, environmentally friendly materials, synthetic materials, polymers, plastics, lithium ion power supplies, petroleum-based materials, open space concepts, and unprotected lightweight construction. Another negative impact on home fires is storage of multiple and extraneous items in the home (sometimes referred to as hoarding)., which means citizens have less time — research shows 3 minutes — to exit their homes when fire commences. This fact, in particular, proves to be very negative for the older community and the mobile impaired community who can't physically reach safety in good time. The firefighters who enter these homes are in direct contact to many contributing hazards such as floor collapses, home furnishings, and other material impeding their ability to save lives, as well as having to get people of all facets and abilities out to safety.

B.6.1 Firefighter Health and Safety. Fire services continue to evaluate and understand risk and risk management with respect to home fire sprinklers, firefighters' and citizens' exposure, and risk to fire hazards. This is a learning process to understand and evaluate and is subject to much research and testing. Some of this research to help promote home fire sprinklers includes looking at fires that are being confined because of the existence of home fire sprinklers in the area of origin, which, in turn, lessens the likelihood and requirement for firefighters to combat and extinguish fire. With home fire sprinklers, the cost and time it takes to restore a home from fire damage can be limited to having to repair one room verses an entire house damaged from a fire. It is estimated that the time it can take to repair a house from a fire might be 1 week to 2 weeks to repair one room verses 3 months to 6 months to repair an entire house, plus the cost of the time the owner is out of their home. Another consideration for the use of home fire sprinklers includes reduced firefighter operational engagement in fire suppression of uncontrolled and hazardous environments. Firefighters are repeatedly exposed to complex mixtures of concentrated carcinogens, from intense heat and pressure of a fire. There are five principle causes of injury and death among Canadian firefighters: cancer, traumatic injury, cardiovascular disease, respiratory disease, and mental health problems. A 2018 study, "Determinants of Injury and Death in Canadian Firefighters" indicates cancer represents over 86 percent of all fatal firefighter deaths. With the use of home fire sprinklers, firefighters reduce the amount of time they are exposed to potential toxins. These harmful toxins bleed through personal protective equipment as personal protective equipment is not sufficient protection against toxins. Many firefighters report smelling like smoke or burning plastic for days after fighting a fire. These carcinogens that firefighters encounter are inhaled through the lungs, inadvertently swallowed via the upper aero digestive tract, and absorbed in significant concentrations directly through the skin when firefighters remove and handle contaminated bunker gear and equipment. With the use of home fire sprinklers, both fire services and water purveyors can reduce resources. This is done by reducing the amount of municipal water used and needed to fight fires. Response time to a fire event can be elevated because of home fire sprinklers. This gives fire services more time to respond to a fire scene. Firefighters do not necessarily need extraneous equipment and/or personnel to assist them in fighting the fire.

B.6.2 Cost of Covering Injuries and Fatalities. NFPA Fire Sprinkler Initiative, "The Truth about Home Fire Sprinklers," shows that risk of dying in a reported home fire is 85 percent lower if home fire sprinklers are present. A study, "The Economic Impact and Potential Years of Life Lost from Fire Deaths in Residential Homes," indicates that mortality due to residential fires in nonsprinklered homes has a substantial economic impact of 23,782 potential years of life lost (PYLL). There are vast costs for hospitals treating burn patients resulting from homes not having home fire sprinklers. A 2014 study, "Healthcare Costs of Burn Patients from Homes Without Fire Sprinklers," indicates that over a 17-year period, the average per burn patient care cost is CAN $84,678, ensuing a total cost of CAN $96,488,194. There are other monumental costs associated with burn patient care with respect to the use of outside resources resulting in a cumulative cost of CAN $3,605,775,200. A 2018 study, "Examining the Relationship Between Firefighter Injuries and Fatalities in the Built Environment," indicates that 95 percent to 97 percent of residential fires occur in buildings without any sprinkler protection and

account for an overwhelming majority of fire-related injuries and deaths to civilians and firefighters.

B.7 Environmental Stewardship. In building construction, focus is often made on the selection of materials that are sustainable and have a minimal impact on the environment through the life of the construction project. All of these efforts are negated if there is a fire event. This is due to the release of carbon dioxide and other greenhouse gasses from the burning combustible material. Additional impact is involved with the disposal of any material involved in the fire.

B.7.1 Environmental Impact. Active fire protection systems like an automatic fire sprinkler system provide a means of limiting the environmental impact of a fire. A 2010 study, "Environmental Impact of Automatic Fire Sprinklers," conducted by FM Global in partnership with the Home Fire Sprinkler Coalition, studied the following:

(1) The types, quantity, and duration of air and water pollutants released from a home fire as well as the water usage from fire sprinklers and firefighters' hoses
(2) The environmental impact resulting from burning household furnishings and finish materials as well as disposing of the fire-damaged contents of a home
(3) The carbon footprint associated with rebuilding a burnt home

In the unsprinklered room, fire service intervention extinguished the fire. In the sprinklered room, a single residential fire sprinkler was used to control the fire until final extinguishment was achieved by fire service. The study examined total greenhouse gas production, quantity of water required to extinguish the fire, quality of the water runoff, potential impact of wastewater runoff on groundwater and surface water, and mass of materials requiring disposal. Automatic fire sprinklers do the following:

(1) Reduce fire damage by up to 97 percent
(2) Reduce water usage to fight a home fire by upwards of 90 percent
(3) Reduce the amount of water pollution released into the environment

The research clearly shows that residential fire sprinklers play a significant role in reducing water use and greenhouse gas emissions during home fires.

B.8 Sustainability of Homes and Affordable Housing. The built environment actively pursues innovations, and environmentally sustainable technologies and materials are making building construction more affordable and available. The introduction of new building materials, methods, and techniques changes the ways in which fire behaves. These changes have the potential to negatively impact buildings, their occupants, firefighters, and other first responders. A National Fire Protection Association publication, "Fire Safety in a Sustainable World," discusses the fact that many of the firefighting tactics used today are based on the past hundred years of firefighting experience. When new materials and systems are introduced into the built environment, firefighters have to adapt their tactics to both help control the fire and protect themselves. NFPA highlights the following 10 emerging fire hazards associated with sustainable materials and systems:

(1) Lightweight construction. Lightweight construction has become more popular in residential construction during the last decade. It is a popular choice since it can offer lower costs and reduced use of natural materials and allow for large open floor plans in both low-rise commercial and residential buildings and improved structural stability. Lightweight construction can come in many forms, but the one of the most popular is composite wood assemblies. Composite wood joists often have considerably thinner web sections than traditional sawn lumber members and have reduced inherent fire resistance.
(2) Engineered wood trusses. The metal gusset plates used to connect the truss can deform when exposed to high temperatures and can contribute to early failure of the truss.
(3) Insulation. New insulation methods help reduce energy costs by regulating building temperatures and reducing the amount of "leaks" in a building. While materials like rigid foam insulation, spray-applied foam insulation, structural integrated panels (SIP), exterior insulation and finish systems (EIFS), and foil insulation systems are beneficial for sustainability goals, they can contribute to fire spread and increased smoke production. Airtight construction can create abnormal conditions during a fire event, including backdrafts. Insulated concrete forms is another example of a new insulation method. "Stay in place" concrete forms are made of expanded polystyrene. If left untreated or uncovered during or after construction, these forms can contribute to a fire.
(4) Glazing. Increased glazing areas including skylights and light wells can contribute to hazards for firefighters trying to access and navigate a building. Increased amounts of glazing can present more opportunities for breakage or fire spread.
(5) Furnishings and contents. Some modern furnishings and contents can contribute to more fire spread and smoke production when compared to traditional furnishings and contents.
(6) Water supply. Local jurisdictions or weather conditions can put limits on water availability and discharge into public water sources. During fire conditions, the water demand for the building can exceed the available supply. Designers should be sure to include water storage in their system designs if the required supply cannot be met. Consideration should be given to water runoff during sprinkler testing and contaminates in water runoff during a fire event.
(7) Natural ventilation. Natural ventilation is used to circulate building air without the use of mechanical equipment. While this reduces energy costs, it also can create an obstacle for firefighters when trying to control smoke movement.
(8) Standoff/double skin facades. A standoff or double skin facade creates a vertical flue space for air to travel along the outside of a building. This feature helps regulate building temperature and conserve energy. While beneficial for ventilation and energy conservation, standoff facades can create vertical flue spaces for flame and smoke to travel if not protected properly.
(9) Vegetative roof systems. Also known as a "green roof," a vegetative roof system is a roof of a building that is covered in plant material. The roof is covered with layers of barrier materials, soil, irrigation systems, and plants. These roofs help insulate a building, collect rainwater, and reduce heat island effects. It is important to ensure the plant material is maintained and watered properly because dry plant material can contribute to fire spread.

The impact on the roof fire rating should also be determined.

(10) Photovoltaic (PV) panels. PV systems are used to generate electricity and can be found mounted on roofs, on walls, or as standalone systems. These systems each have a number of components that work together to generate usable electricity. The PV cells are grouped together into panels, and when grouped together, they form a PV array. PV systems also include batteries to store the current and inverters that change the current into usable electricity. While any electrical current is dangerous, one of the most hazardous components of a PV system is the actual panel. The panels continuously produce electrical current when exposed to the sun, even when they are disconnected from the rest of the system. The panels are also covered in glass and can easily be damaged. It is important to understand the electrical shock hazards associated with these panels and to design arrays with proper spacing to allow for firefighter access to the roof. It is also important to evaluate the impact the arrays will have on the roof fire rating.

These emerging technologies reinforce the importance of fire sprinkler systems as a mitigating measure. An effective sprinkler system can prevent a fire from ever damaging lightweight building materials and causing a collapse. Sprinklers can also contain a fire so that firefighters do not need to access roof top areas to conduct ventilation. Sprinkler systems are invaluable in a fire by helping occupants evacuate structures safely and giving them time to get out of harm's way. These systems also save the lives of responding firefighters by mitigating the fire before it gets out of control and threatens vulnerable building systems. Reducing the amount or severity of fires can reduce wasted materials, pollution, and save money. During a fire event, building materials are damaged, property is lost, water is wasted, and pollutants are released into the environment through the air and water. After a fire event, materials that were damaged are transferred to landfills and new materials are brought in to replace them. Fire safety is a sustainable practice.

B.9 Additional Resources.

Canadian Automatic Sprinkler Association: http://www.casafiresprinkler.org

Home Fire Sprinkler Coalition: https://homefiresprinkler.org/ and https://homefiresprinklercanada.ca

National Association of State Fire Marshals: https://www.firemarshals.org

National Fire Protection Association and Fire Protection Research Foundation: https://www.nfpa.org

National Fire Sprinkler Association: https://nfsa.org

International Residential Fire Sprinkler Coalition: http://ircfiresprinkler.org

U.S. Fire Administration: https://www.usfa.fema.gov/prevention/technology/home_fire_sprinklers.html

B.10 References.

Banfield, J. et al., "Healthcare Costs of Burn Patients From Homes Without Fire Sprinklers," *J Burn Care Res*, January–February 2015, 36(1):213–7.

Banfield, J. et al., "The economic impact and potential years of life lost from fire deaths in residential homes," Sunnybrook Health Sciences Centre, 2016.

Hugo, J., "Guide to Benefits of Fire Sprinklers in the IRC – From 2000 to 2018," *National Fire Sprinkler Magazine*, January–February 2018, No. 206, pp. 19–20.

Kerber, S., "Analysis of Changing Residential Fire Dynamics and Its Implications on Firefighter Operational Timeframes," *Fire Technology*, 48, 865–891, 2012.

Newport Partners LLC, "Incentives for the Use of Residential Fire Sprinkler Systems in U.S. Communities," The Fire Protection Research Foundation, 2010.

Ramsden, R. et al., "Determinants of Injury and Death in Canadian Firefighters," University of the Fraser Valley, 2018.

Utiskul, Y. and Wu, N., "Residential Fire Sprinklers — Water Usage and Water Meter Performance Study," The Fire Protection Research Foundation, 2011.

Vecchiarelli, T., "Fire safety in a sustainable world," National Fire Protection Association, 2014.

Wieczorek, C., Ditch, B., and Bill, R, "The Environmental Impact of Automatic Fire Sprinklers," FM Global Research Division, 2010.

Zheng, A. et al., "Examining the Relationship Between Firefighter Injuries and Fatalities in the Built Environment: A case for reducing the risk to firefighters through adequate firefighting experience, working smoke alarms and sprinkler coverage in buildings," University of the Fraser Valley, 2018.

Annex C Informational References

C.1 Referenced Publications. The documents or portions thereof listed in this annex are referenced within the informational sections of this standard and are not part of the requirements of this document unless also listed in Chapter 2 for other reasons.

C.1.1 NFPA Publications. National Fire Protection Association, 1 Batterymarch Park, Quincy, MA 02169-7471.

NFPA 1, *Fire Code*, 2021 edition.

NFPA 13, *Standard for the Installation of Sprinkler Systems*, 2022 edition.

NFPA 13R, *Standard for the Installation of Sprinkler Systems in Low-Rise Residential Occupancies*, 2022 edition.

NFPA 24, *Standard for the Installation of Private Fire Service Mains and Their Appurtenances*, 2022 edition.

NFPA 72®, National Fire Alarm and Signaling Code®, 2022 edition.

NFPA 286, *Standard Methods of Fire Tests for Evaluating Contribution of Wall and Ceiling Interior Finish to Room Fire Growth*, 2019 edition.

NFPA 5000®, *Building Construction and Safety Code®*, 2021 edition.

C.1.2 Other Publications.

C.1.2.1 ASTM Publications. ASTM International, 100 Barr Harbor Drive, P.O. Box C700, West Conshohocken, PA 19428-2959.

ASTM A135/A135M, *Standard Specification for Electric-Resistance-Welded Steel Pipe*, 2019.

ASTM E84, *Standard Test Method for Surface Burning Characteristics of Building Materials*, 2020.

ASTM F437, *Standard Specification for Threaded Chlorinated Poly(Vinyl Chloride) (CPVC) Plastic Pipe Fittings, Schedule 80*, 2015.

ASTM F438, *Standard Specification for Socket-Type Chlorinated Poly(Vinyl Chloride) (CPVC) Plastic Pipe Fittings, Schedule 40*, 2017.

ASTM F439, *Standard Specification for Chlorinated Poly(Vinyl Chloride) (CPVC) Plastic Pipe Fittings, Schedule 80*, 2013.

ASTM F442/F442M, *Standard Specification for Chlorinated Poly(Vinyl Chloride) (CPVC) Plastic Pipe (SDR–PR)*, 2019.

ASTM F876, *Standard Specification for Crosslinked Polyethylene (PEX) Tubing*, 2019a.

ASTM SI10, *IEEE/ASTM SI 10 American National Standard for Metric Practice*, 2016.

C.1.2.2 FPRF Publications. Fire Protection Research Foundation, 1 Batterymarch Park, Quincy, MA 02169-7471.

"Analysis of the Performance of Residential Sprinkler Systems with Sloped or Sloped and Beamed Ceilings," July 2010.

Antifreeze Solutions Supplied through Spray Sprinklers — Interim Report, February 2012.

Antifreeze Systems in Home Fire Sprinkler Systems — Literature Review and Research Plan, June 2010.

Antifreeze Systems in Home Fire Sprinkler Systems — Phase II Final Report, December 2010.

"Sprinkler Insulation: A Literature Review," July 2011.

C.1.2.3 NFIRS Publications. National Fire Incident Reporting System, U.S. Fire Administration, 16825 S. Seton Avenue, Emmitsburg, MD 21727.

NFIRS 5.0, Program Manager Toolkit (CD-ROM).

C.1.2.4 NFSA Publications. National Fire Sprinkler Association, 514 Progress Drive, Suite A, Linthicum Heights, MD 21090.

Valentine and Isman, *Kitchen Cabinets and Residential Sprinklers*, November 2005.

Valentine and Isman, *Interaction of Residential Sprinklers, Ceiling Fans and Similar Obstructions*, November 2005.

C.1.2.5 NIST Publications. National Institute of Standards and Technology, 100 Bureau Drive, Gaithersburg, MD 20899-1070.

NIST GCR 05-875, *Research Investigation for Determination of Residential Sprinkler Performance*, February 2004.

C.1.2.6 UL Publications. Underwriters Laboratories Inc., 333 Pfingsten Road, Northbrook, IL 60062-2096.

UL 723, *Test for Surface Burning Characteristics of Building Materials*, 2018.

UL 1626, *Residential Sprinklers for Fire-Protection Service*, 2008, revised 2018.

C.1.2.7 References for Annex B.

Banfield, J. et al. Healthcare Costs of Burn Patients From Homes Without Fire Sprinklers. *J Burn Care Res.* 2015 Jan-Feb; 36(1):213-7.

Banfield, J. et al. "The economic impact and potential years of life lost from fire deaths in residential homes," Sunnybrook Health Sciences Centre. 2016.

Hugo, J. Guide to Benefits of Fire Sprinklers in the IRC – From 2000 to 2018. *National Fire Sprinkler Magazine*. January – February 2018, No. 206, pp. 19-20.

Kerber, S. Analysis of Changing Residential Fire Dynamics and Its Implications on Firefighter Operational Timeframes. *Fire Technology*, 48, 865–891, 2012.

Newport Partners LLC. "Incentives for the Use of Residential Fire Sprinkler Systems in U.S. Communities." The Fire Protection Research Foundation. 2010.

Ramsden, R. et al. "Determinants of Injury and Death in Canadian Firefighters." University of the Fraser Valley. 2018.

Utiskul, Y. & Wu, N. "Residential Fire Sprinklers - Water Usage and Water Meter Performance Study." The Fire Protection Research Foundation. 2011.

Vecchiarelli, T. "Fire safety in a sustainable world." National Fire Protection Association. 2014.

Wieczorek, C., Ditch, B. & Bill, R. "The Environmental Impact of Automatic Fire Sprinklers." FM Global Research Division. 2010.

Zheng, A. et al. "Examining the Relationship Between Firefighter Injuries and Fatalities in the Built Environment: A case for reducing the risk to firefighters through adequate firefighting experience, working smoke alarms and sprinkler coverage in buildings." University of the Fraser Valley. 2018.

C.2 Informational References. (Reserved)

C.3 References for Extracts in Informational Sections.

NFPA 13, *Standard for the Installation of Sprinkler Systems*, 2022 edition.

Index

Copyright © 2021 National Fire Protection Association. All Rights Reserved.

The copyright in this index is separate and distinct from the copyright in the document that it indexes. The licensing provisions set forth for the document are not applicable to this index. This index may not be reproduced in whole or in part by any means without the express written permission of NFPA.

-A-

Administration, Chap. 1
- Equivalency, 1.4
- New Technology, 1.6
- Purpose, 1.2, A.1.2
- Retroactivity, 1.3
- Scope, 1.1, A.1.1
- Units, 1.5

Approved
- Definition, 3.2.1, A.3.2.1

Authority Having Jurisdiction (AHJ)
- Definition, 3.2.2, A.3.2.2

-B-

Back-to-Back Townhouse
- Definition, 3.3.1

Bathroom
- Definition, 3.3.2, A.3.3.2

-C-

Compartment
- Definition, 3.3.3

-D-

Definitions, Chap. 3

Design Discharge
- Definition, 3.3.4

Discharge and Hydraulic Calculations, Chap. 10
- Design Discharge, 10.1
  - Sprinklers That Are Listed with Specific Discharge Criteria, 10.1.1, A.10.1.1
  - Water Supply, 10.1.2
- Number of Design Sprinklers, 10.2, A.10.2
- Pipe Sizing, 10.4
  - General Pipe Sizing Method, 10.4.4, A.10.4.4
  - Minimum Pipe Size, 10.4.2
  - Prescriptive Pipe Sizing Method, 10.4.9
    - Available Pressure Equation, 10.4.9.1
    - Calculation Procedure, 10.4.9.2
- Piping Configurations, 10.3

Dwelling
- Definition, 3.3.5

Dwelling Unit
- Definition, 3.3.6

-E-

Explanatory Material, Annex A

-G-

General Requirements, Chap. 4
- Documentation, 4.4, A.4.4
- Listed or Labeled, 4.3
- Qualifications, 4.5
- Sprinkler Temperature Ratings, 4.1
- Tube, 4.2

-I-

Incentives for Residential Fire Sprinkler Use — Advantages for Builders, Developers, and Communities, Annex B
- Additional Resources, B.9
- Background, B.2
- Building Construction, B.5
  - Commercial Occupancies in Residential Settings, B.5.11
  - Emergency Escape Windows in Basements, B.5.8
  - Exterior Walls, B.5.1
  - Fire Protection of Floors, B.5.6
  - Habitable Attic, B.5.10
  - Mezzanines, B.5.9
  - Penetrations, B.5.5
  - Residential Subdivisions, B.5.7
  - Structural Independence, B.5.3
  - Townhouses, B.5.2
  - Two-Family Dwelling, B.5.4
- Community Process and Infrastructure, B.3
  - Construction Incentives and Benefits, B.3.1
  - Homeowner Incentives and Benefits, B.3.2
  - Residential Water Meters, B.3.3
- Community Risk Reduction, B.6
  - Cost of Covering Injuries and Fatalities, B.6.2
  - Firefighter Health and Safety, B.6.1
- Environmental Stewardship, B.7
  - Environmental Impact, B.7.1
- Introduction, B.1
- References, B.10
- Site Planning and Development, B.4
  - Additional Units Permitted, B.4.5
  - Expansion of Existing Water Supply May Not Be Needed, B.4.6
  - Gated Communities, B.4.9
  - Increased Hydrant Spacing, B.4.7
  - Increased Street Grades and Building Setbacks, B.4.4
  - Longer Dead-End Streets, B.4.2
  - Street-Width Reduction, B.4.1
  - Subdivision Single Access Point, B.4.8
  - Tee Turnarounds Permitted, B.4.3
- Sustainability of Homes and Affordable Housing, B.8

Informational References, Annex C

Inspection, Testing, and Maintenance, Chap. 12
- General, 12.1, A.12.1
- Inspections and Tests, 12.2, A.12.2

Maintenance, 12.3
Antifreeze Systems, 12.3.5, A.12.3.5
Annual Antifreeze Solution Test and Replacement Procedure, 12.3.5.1
Tag, 12.3.5.1.4
Inactive Systems, 12.3.6
Painting Sprinklers, 12.3.3
Wet Pipe Systems, 12.3.4, A.12.3.4
Installation, Chap. 7
Alarms, 7.6, A.7.6
Attics, 7.7
Drains and Test Connections, 7.2
Multipurpose and Passive Purge Systems, 7.8
Piping Support, 7.4
Pressure Gauges, 7.3
Sprinklers, 7.5
Escutcheon Plates, 7.5.8
Painting and Ornamental Finishes, 7.5.7, A.7.5.7
Solvent Cement, 7.5.9
Temperature Ratings, 7.5.6
Valves, 7.1

-L-

Labeled
Definition, 3.2.3
Listed
Definition, 3.2.4, A.3.2.4

-M-

Manufactured Home
Definition, 3.3.7, A.3.3.7

-P-

Premixed Antifreeze Solution
Definition, 3.3.8, A.3.3.8
Pressure
Definition, 3.3.9
Supply Pressure
Definition, 3.3.9.1
System Pressure
Definition, 3.3.9.2
System Working Pressure
Definition, 3.3.9.3
Protection from Freezing, Chap. 9
Antifreeze Systems, 9.2, A.9.2
Antifreeze Solutions, 9.2.2, A.9.2.2
Arrangement of Supply Piping and Valves, 9.2.3, A.9.2.3
Connections Between Antifreeze System and Wet Pipe System with Backflow Prevention Device Installed, 9.2.3.2, A.9.2.3.2
Connections Between Antifreeze System and Wet Pipe System with No Backflow Prevention Device, 9.2.3.1
Conformity with Health Regulations, 9.2.1, A.9.2.1
Hydrostatic Test, 9.2.4
Placard Information, 9.2.5
Dry Pipe and Preaction Systems, 9.3
Air Supply, 9.3.9
Auxiliary Drains, 9.3.8
Detection Devices, 9.3.5, A.9.3.5
Drainage, 9.3.7
Dry Pipe and Double Interlock Preaction System Water Delivery, 9.3.3
Location and Protection of Dry Pipe and Preaction Valves, 9.3.4
Preaction Systems, 9.3.2
Sprinklers, 9.3.1
System Configuration, 9.3.6
System Types, 9.1
Systems in Areas Subject to Freezing, 9.1.2
Wet Pipe Systems, 9.1.1, A.9.1.1
Pump
Definition, 3.3.10

-R-

Referenced Publications, Chap. 2

-S-

Shadow Area
Definition, 3.3.11, A.3.3.11
Shall
Definition, 3.2.5
Should
Definition, 3.2.6
Sprinkler
Automatic Sprinkler
Definition, 3.3.12.1
Definition, 3.3.12
Residential Sprinkler
Definition, 3.3.12.2
Sprinkler Position and Location, Chap. 8
Design Criteria, 8.1
Nonresidential Sprinklers, 8.1.2
Operating Pressure, 8.1.4
Sloped Ceilings, 8.1.1
Sprinkler Coverage, 8.1.3
Residential Sprinklers, 8.1.3.1
Location of Sprinklers, 8.3
Tiny House(s), 8.3.10
Position of Sprinklers, 8.2
Basements Without Ceilings, 8.2.4
Closets and Compartments, 8.2.7
Exposed Barrel Lengths for Dry Sprinklers, 8.2.6, A.8.2.6
Nonresidential Sprinklers, 8.2.3
Obstructions to Residential Sprinklers, 8.2.5, A.8.2.5
Continuous Obstructions to Pendent Sprinklers, 8.2.5.3
Continuous Obstructions to Sidewall Sprinklers, 8.2.5.4
Pendent Sprinklers, 8.2.5.1
Shadow Areas, 8.2.5.7, A.8.2.5.7
Sidewall Sprinklers, 8.2.5.2
Soffits and Cabinets, 8.2.5.5
Residential Pendent and Upright Sprinklers, 8.2.1
Residential Sidewall Sprinklers, 8.2.2

Sprinkler Systems
Antifreeze Sprinkler System
Definition, 3.3.13.1
Definition, 3.3.13
Dry Pipe Sprinkler System
Definition, 3.3.13.2
Multipurpose Piping Sprinkler System
Definition, 3.3.13.3, A.3.3.13.3
Network Sprinkler System
Definition, 3.3.13.4, A.3.3.13.4
Passive Purge Sprinkler System
Definition, 3.3.13.5, A.3.3.13.5
Pre-Engineered Sprinkler System
Definition, 3.3.13.7
Preaction Sprinkler System
Definition, 3.3.13.6
Sprinkler System
Definition, 3.3.13.8
Stand-Alone Sprinkler System
Definition, 3.3.13.9, A.3.3.13.9
Wet Pipe Sprinkler System
Definition, 3.3.13.10
Standard
Definition, 3.2.7
System Acceptance, Chap. 11
Acceptance Tests, 11.2
Hydrostatic Tests, 11.2.1, A.11.2.1
Pump Tests, 11.2.2, A.11.2.2
System Operational Tests, 11.2.3
Dry Pipe and Double-Interlock Preaction Systems, 11.2.3.3
Preaction Systems, 11.2.3.2
Waterflow Devices, 11.2.3.1
General, 11.1
System Components, Chap. 5
Aboveground Pipe and Equipment, 5.2
General, 5.1
Pre-Engineered Systems, 5.4
Water Supply Pipe and Fittings, 5.3, A.5.3

-T-

Townhouse
Definition, 3.3.14

-V-

Valve
Check Valve
Definition, 3.3.15.1
Control Valve
Definition, 3.3.15.2, A.3.3.15.2
Definition, 3.3.15

-W-

Water Supply, Chap. 6
Common Supply Pipes, 6.5
General Provisions, 6.1
Manufactured Home Water Supply, 6.4
Multipurpose Piping System, 6.3, A.6.3
Water Supply Sources, 6.2, A.6.2
Waterflow Alarm
Definition, 3.3.16
Waterflow Detector
Definition, 3.3.17

Sequence of Events for the Standards Development Process

Once the current edition is published, a Standard is opened for Public Input.

Step 1 – Input Stage

- Input accepted from the public or other committees for consideration to develop the First Draft
- Technical Committee holds First Draft Meeting to revise Standard (23 weeks); Technical Committee(s) with Correlating Committee (10 weeks)
- Technical Committee ballots on First Draft (12 weeks); Technical Committee(s) with Correlating Committee (11 weeks)
- Correlating Committee First Draft Meeting (9 weeks)
- Correlating Committee ballots on First Draft (5 weeks)
- First Draft Report posted on the document information page

Step 2 – Comment Stage

- Public Comments accepted on First Draft (10 weeks) following posting of First Draft Report
- If Standard does not receive Public Comments and the Technical Committee chooses not to hold a Second Draft meeting, the Standard becomes a Consent Standard and is sent directly to the Standards Council for issuance (see Step 4) or
- Technical Committee holds Second Draft Meeting (21 weeks); Technical Committee(s) with Correlating Committee (7 weeks)
- Technical Committee ballots on Second Draft (11 weeks); Technical Committee(s) with Correlating Committee (10 weeks)
- Correlating Committee Second Draft Meeting (9 weeks)
- Correlating Committee ballots on Second Draft (8 weeks)
- Second Draft Report posted on the document information page

Step 3 – NFPA Technical Meeting

- Notice of Intent to Make a Motion (NITMAM) accepted (5 weeks) following the posting of Second Draft Report
- NITMAMs are reviewed and valid motions are certified by the Motions Committee for presentation at the NFPA Technical Meeting
- NFPA membership meets each June at the NFPA Technical Meeting to act on Standards with "Certified Amending Motions" (certified NITMAMs)
- Committee(s) vote on any successful amendments to the Technical Committee Reports made by the NFPA membership at the NFPA Technical Meeting

Step 4 – Council Appeals and Issuance of Standard

- Notification of intent to file an appeal to the Standards Council on Technical Meeting action must be filed within 20 days of the NFPA Technical Meeting
- Standards Council decides, based on all evidence, whether to issue the standard or to take other action

Notes:

1. Time periods are approximate; refer to published schedules for actual dates.
2. Annual revision cycle documents with certified amending motions take approximately 101 weeks to complete.
3. Fall revision cycle documents receiving certified amending motions take approximately 141 weeks to complete.

Committee Membership Classifications[1,2,3,4]

The following classifications apply to Committee members and represent their principal interest in the activity of the Committee.

1. M *Manufacturer:* A representative of a maker or marketer of a product, assembly, or system, or portion thereof, that is affected by the standard.
2. U *User:* A representative of an entity that is subject to the provisions of the standard or that voluntarily uses the standard.
3. IM *Installer/Maintainer:* A representative of an entity that is in the business of installing or maintaining a product, assembly, or system affected by the standard.
4. L *Labor:* A labor representative or employee concerned with safety in the workplace.
5. RT *Applied Research/Testing Laboratory:* A representative of an independent testing laboratory or independent applied research organization that promulgates and/or enforces standards.
6. E *Enforcing Authority:* A representative of an agency or an organization that promulgates and/or enforces standards.
7. I *Insurance:* A representative of an insurance company, broker, agent, bureau, or inspection agency.
8. C *Consumer:* A person who is or represents the ultimate purchaser of a product, system, or service affected by the standard, but who is not included in (2).
9. SE *Special Expert:* A person not representing (1) through (8) and who has special expertise in the scope of the standard or portion thereof.

NOTE 1: "Standard" connotes code, standard, recommended practice, or guide.

NOTE 2: A representative includes an employee.

NOTE 3: While these classifications will be used by the Standards Council to achieve a balance for Technical Committees, the Standards Council may determine that new classifications of member or unique interests need representation in order to foster the best possible Committee deliberations on any project. In this connection, the Standards Council may make such appointments as it deems appropriate in the public interest, such as the classification of "Utilities" in the National Electrical Code Committee.

NOTE 4: Representatives of subsidiaries of any group are generally considered to have the same classification as the parent organization.

Submitting Public Input / Public Comment Through the Online Submission System

Following publication of the current edition of an NFPA standard, the development of the next edition begins and the standard is open for Public Input.

Submit a Public Input

NFPA accepts Public Input on documents through our online submission system at www.nfpa.org. To use the online submission system:

- Choose a document from the List of NFPA codes & standards or filter by Development Stage for "codes accepting public input."
- Once you are on the document page, select the "Next Edition" tab.
- Choose the link "The next edition of this standard is now open for Public Input." You will be asked to sign in or create a free online account with NFPA before using this system.
- Follow the online instructions to submit your Public Input (see www.nfpa.org/publicinput for detailed instructions).
- Once a Public Input is saved or submitted in the system, it can be located on the "My Profile" page by selecting the "My Public Inputs/Comments/NITMAMs" section.

Submit a Public Comment

Once the First Draft Report becomes available there is a Public Comment period. Any objections or further related changes to the content of the First Draft must be submitted at the Comment Stage. To submit a Public Comment follow the same steps as previously explained for the submission of Public Input.

Other Resources Available on the Document Information Pages

Header: View document title and scope, access to our codes and standards or NFCSS subscription, and sign up to receive email alerts.

Current & Prior Editions	Research current and previous edition information.
Next Edition	Follow the committee's progress in the processing of a standard in its next revision cycle.
Technical Committee	View current committee rosters or apply to a committee.
Ask a Technical Question	For members, officials, and AHJs to submit standards questions to NFPA staff. Our Technical Questions Service provides a convenient way to receive timely and consistent technical assistance when you need to know more about NFPA standards relevant to your work.
News	Provides links to available articles and research and statistical reports related to our standards.
Purchase Products & Training	Discover and purchase the latest products and training.
Related Products	View related publications, training, and other resources available for purchase.

Information on the NFPA Standards Development Process

I. Applicable Regulations. The primary rules governing the processing of NFPA standards (codes, standards, recommended practices, and guides) are the NFPA *Regulations Governing the Development of NFPA Standards (Regs)*. Other applicable rules include NFPA *Bylaws*, NFPA *Technical Meeting Convention Rules*, NFPA *Guide for the Conduct of Participants in the NFPA Standards Development Process*, and the NFPA *Regulations Governing Petitions to the Board of Directors from Decisions of the Standards Council*. Most of these rules and regulations are contained in the *NFPA Standards Directory*. For copies of the *Directory*, contact Codes and Standards Administration at NFPA headquarters; all these documents are also available on the NFPA website at "www.nfpa.org/regs."

The following is general information on the NFPA process. All participants, however, should refer to the actual rules and regulations for a full understanding of this process and for the criteria that govern participation.

II. Technical Committee Report. The Technical Committee Report is defined as "the Report of the responsible Committee(s), in accordance with the Regulations, in preparation of a new or revised NFPA Standard." The Technical Committee Report is in two parts and consists of the First Draft Report and the Second Draft Report. (See *Regs* at Section 1.4.)

III. Step 1: First Draft Report. The First Draft Report is defined as "Part one of the Technical Committee Report, which documents the Input Stage." The First Draft Report consists of the First Draft, Public Input, Committee Input, Committee and Correlating Committee Statements, Correlating Notes, and Ballot Statements. (See *Regs* at 4.2.5.2 and Section 4.3.) Any objection to an action in the First Draft Report must be raised through the filing of an appropriate Comment for consideration in the Second Draft Report or the objection will be considered resolved. [See *Regs* at 4.3.1(b).]

IV. Step 2: Second Draft Report. The Second Draft Report is defined as "Part two of the Technical Committee Report, which documents the Comment Stage." The Second Draft Report consists of the Second Draft, Public Comments with corresponding Committee Actions and Committee Statements, Correlating Notes and their respective Committee Statements, Committee Comments, Correlating Revisions, and Ballot Statements. (See *Regs* at 4.2.5.2 and Section 4.4.) The First Draft Report and the Second Draft Report together constitute the Technical Committee Report. Any outstanding objection following the Second Draft Report must be raised through an appropriate Amending Motion at the NFPA Technical Meeting or the objection will be considered resolved. [See *Regs* at 4.4.1(b).]

V. Step 3a: Action at NFPA Technical Meeting. Following the publication of the Second Draft Report, there is a period during which those wishing to make proper Amending Motions on the Technical Committee Reports must signal their intention by submitting a Notice of Intent to Make a Motion (NITMAM). (See *Regs* at 4.5.2.) Standards that receive notice of proper Amending Motions (Certified Amending Motions) will be presented for action at the annual June NFPA Technical Meeting. At the meeting, the NFPA membership can consider and act on these Certified Amending Motions as well as Follow-up Amending Motions, that is, motions that become necessary as a result of a previous successful Amending Motion. (See 4.5.3.2 through 4.5.3.6 and Table 1, Columns 1-3 of *Regs* for a summary of the available Amending Motions and who may make them.) Any outstanding objection following action at an NFPA Technical Meeting (and any further Technical Committee consideration following successful Amending Motions, see *Regs* at 4.5.3.7 through 4.6.5) must be raised through an appeal to the Standards Council or it will be considered to be resolved.

VI. Step 3b: Documents Forwarded Directly to the Council. Where no NITMAM is received and certified in accordance with the *Technical Meeting Convention Rules*, the standard is forwarded directly to the Standards Council for action on issuance. Objections are deemed to be resolved for these documents. (See *Regs* at 4.5.2.5.)

VII. Step 4a: Council Appeals. Anyone can appeal to the Standards Council concerning procedural or substantive matters related to the development, content, or issuance of any document of the NFPA or on matters within the purview of the authority of the Council, as established by the *Bylaws* and as determined by the Board of Directors. Such appeals must be in written form and filed with the Secretary of the Standards Council (see *Regs* at Section 1.6). Time constraints for filing an appeal must be in accordance with 1.6.2 of the *Regs*. Objections are deemed to be resolved if not pursued at this level.

VIII. Step 4b: Document Issuance. The Standards Council is the issuer of all documents (see Article 8 of *Bylaws*). The Council acts on the issuance of a document presented for action at an NFPA Technical Meeting within 75 days from the date of the recommendation from the NFPA Technical Meeting, unless this period is extended by the Council (see *Regs* at 4.7.2). For documents forwarded directly to the Standards Council, the Council acts on the issuance of the document at its next scheduled meeting, or at such other meeting as the Council may determine (see *Regs* at 4.5.2.5 and 4.7.4).

IX. Petitions to the Board of Directors. The Standards Council has been delegated the responsibility for the administration of the codes and standards development process and the issuance of documents. However, where extraordinary circumstances requiring the intervention of the Board of Directors exist, the Board of Directors may take any action necessary to fulfill its obligations to preserve the integrity of the codes and standards development process and to protect the interests of the NFPA. The rules for petitioning the Board of Directors can be found in the *Regulations Governing Petitions to the Board of Directors from Decisions of the Standards Council* and in Section 1.7 of the *Regs*.

X. For More Information. The program for the NFPA Technical Meeting (as well as the NFPA website as information becomes available) should be consulted for the date on which each report scheduled for consideration at the meeting will be presented. To view the First Draft Report and Second Draft Report as well as information on NFPA rules and for up-to-date information on schedules and deadlines for processing NFPA documents, check the NFPA website (www.nfpa.org/docinfo) or contact NFPA Codes & Standards Administration at (617) 984-7246.

DIGITAL ACCESS TO NFPA CODES AND STANDARDS.
AT WORK. AND AT YOUR FINGERTIPS.

SUBSCRIPTIONS STARTING AS LOW AS $9.99/MONTH.

Presenting NFPA LiNK.™ NFPA LiNK™ provides digital access to codes and standards. Find, bookmark, organize, and share knowledge anytime and anywhere. Transform the speed, accuracy, and efficiency of your work.

Learn more at NFPA.org/LiNK

NFPA LiNK™